Kubota

KUBOTA DUCTILE IRON PIPELINE DESIGN MANUAL

Index

Chapter 1 Foreword 4

Chapter 2 General Pipeline Design

2-1 Types of Pipeline System 5
2-2 Pipeline Routing 6
2-3 Location and Laying Depth 7

Chapter 3 Layout of Pipeline

3-1 General 9
3-2 Pipeline Facilities 9

Chapter 4 Pipe Diameter Selection

4-1 General 14
4-2 Calculation of Head Loss 14
4-3 Example of Pipe Diameter Selection 25
4-4 Required Head and Power of Pump 26
4-5 Allowable Flow Velocity 29
4-6 Economical Pipe Diameters 29
4-7 Pipe Size for Distribution Network 30

Chapter 5 Water Hammer

5-1 General 31
5-2 Simplified Calculation of Water Hammer 31
5-3 Prevention of Water Hammer 34

Chapter 6 Pipe Laying Conditions and External Loads

6-1 Earth Pressure due to Earth Cover 35
6-2 Earth Pressure due to Vehicle Load 37

Chapter 7 Design of Ductile Iron Pipe

7-1 General 39
7-2 Design by ISO 10803 39
7-3 Kubota's Design Method 43
7-4 Example of Stress Analysis by Kubota Method 46
7-5 Diametral Deflection 47

Chapter 8 Thrust Anchoring

8-1 General 48
8-2 Thrust Force by Internal Pressure 48
8-3 Anchoring by Concrete Blocks 49
8-4 Design of Concrete Block (Fittings encased) 50
8-5 Design of Concrete Block (Joints exposed) 53
8-6 Reference Tables 54
8-7 Thrust Anchoring by Restrained Joints 55
8-8 Restrained Length 57

Index

Chapter 9 Corrosion Protection

9-1 Internal Corrosion Protection 62
9-2 External Corrosion protection 63
9-3 Electrolytic Corrosion Protection 65
9-4 Cathodic Protection 65

Chapter 10 Pipeline Drawings

10-1 Drawing Procedure of Piping Diagrams 67
10-2 Confirmation of Piping Conditions 68
10-3 Selection of Pipe and Fittings 69
10-4 Selection of Joints 69
10-5 Determination of Piping Composition 70
10-6 Determination of Bends 72
10-7 Determination of Piping Method 75
10-8 Anchoring of Fittings 76
10-9 Calculation of Pipe Cut Length 76
10-10 Use of Collar 77
10-11 Drawing Piping Diagrams 78
10-12 Bill of Quantity of Materials 78

Chapter 11 Installation

11-1 General 81
11-2 Unloading from Truck 81
11-3 Storage 82
11-4 Trenching 82
11-5 Previous Excavation 83
11-6 Drainage of Trench 83
11-7 Pipe Laying 83
11-8 Valve Installation 84
11-9 Backfilling 84

Chapter 12 Jointing

12-1 General 86
12-2 Type of Joint 86
12-3 Jointing Procedure 88
12-4 Deflection of Joints 94
12-5 Connection with Other Kinds of Pipe 97
12-6 Rubber Gasket 98

Chapter 13 Field Hydrostatic Test

13-1 General 99
13-2 Flow Chart of Hydrostatic Test 99
13-3 Details of Each Step 100

Index

Chapter 14 Piping in Soft Ground

14-1 General 106
14-2 Investigation 106
14-3 Calculation of Settlement Amount 107
14-4 Straight Part of Pipeline 108
14-5 Self-anchoring Flexible Joint 112
14-6 Curved Parts of Pipeline 113
14-7 Precaution for Pipe Laying 113

Chapter 15 Piping under Special Conditions

15-1 Pipe Jacking 114
15-2 Piping on Slope 116
15-3 Aboveground Piping 117
15-4 Piping in Tunnel 118
15-5 River Crossing 119
15-6 Railway and Road Crossing 120
15-7 Piping Inside Building 121

Chapter 16 Service Connections

16-1 General 124
16-2 Type of Service Connections 124
16-3 Direct Tapping 124
16-4 Tapping Saddle 125
16-5 Insertion of Tee into Existing Pipeline 125

Appendix 1 Conversion Table 128

Appendix 2 Pipe Arrangement in Chambers 130

Chapter 1 Foreword

Ductile iron pipe is widely used for water supply pipelines, sewage pipelines, industrial water pipelines, as well as agricultural water pipelines. Ductile iron pipe is highly accepted because of its excellent strength, durability and laying workability. However, appropriate piping design and installation are necessary so that each of these characteristics may be used to full advantage.

In this manual, as the “standard manual of piping design”, the design rocess of ductile iron pipeline with examples and references is reviewed to aid in the correct design of ductile iron pipelines. This booklet is not a textbook for pipeline design but is intended to be a good practical guide to the design of ductile iron pipelines, mainly for water works. Therefore, basic and theoretical considerations will be left to standard books.

We hope this manual is helpful in some way to those who are dedicated to the design of ductile iron pipelines.

Note: In this booklet, the dimensions and mechanical properties of ductile iron pipe and fittings are based on International Standard (ISO) and British Standard (BS EN). For pipe and fittings of other standards such as American Standard (ANSI) and Japanese Standard (JIS), it is necessary to amend the dimensions and mechanical properties.

Chapter 2 General Pipeline Design

2-1 Types of Pipeline Systems

2-1-1 Gravity pipeline system

Pipeline can work by gravity if its starting point is higher than the discharging point plus the pressure drop resultant from frictional loss between these two points, expressed in meter of water head.
This system has following characteristics:
(1) No power required
(2) Economy in facility cost, operation cost, maintenance cost and so forth
(3) Good serviceability with trouble-free operation

It is recommended to utilize this system as far as topographical conditions allow.

Gravity pipeline Fig. 2-1

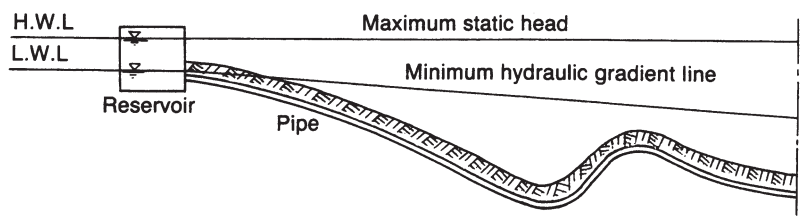

2-1-2 Pumping pipeline system

When the starting point is not high enough to give a gravity supply, it is necessary to pump the water up to the discharge point.
This system has following characteristics:
(1) Easy control of water pressure
(2) Less influence by topographical conditions; consequently less limitation for pipeline routing

Pumping pipeline Fig. 2-2

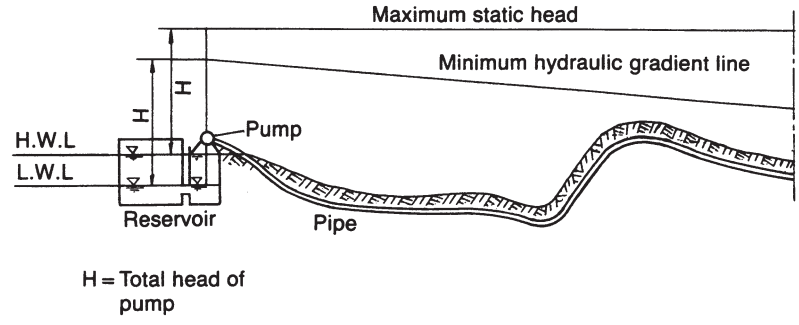

2-2 Pipeline Routing

Pipeline route should be decided under the following considerations.

(1) Pipeline must be designed and laid so that all points in the pipeline come below the minimum hydraulic gradient. (See Fig. 2-1 and 2-2)

(2) With map and actual surveys on several possible pipeline routes, a decision must be made based on composite considerations of adequacy in hydraulics, economy, maintenance, etc.

(3) Acute deflection, whether horizontal or vertical, in the pipeline should be avoided. When it is inevitable for the pipeline to pass above the minimum hydraulic gradient, the pipe shall be increased in diameter to reduce frictional loss to a certain stretch on the upstream side so as to raise the minimum hydraulic gradient above the pipeline. Thereafter, the pipe size can be reduced on the downstream side.

Example of improperly designed pipeline Fig. 2-3

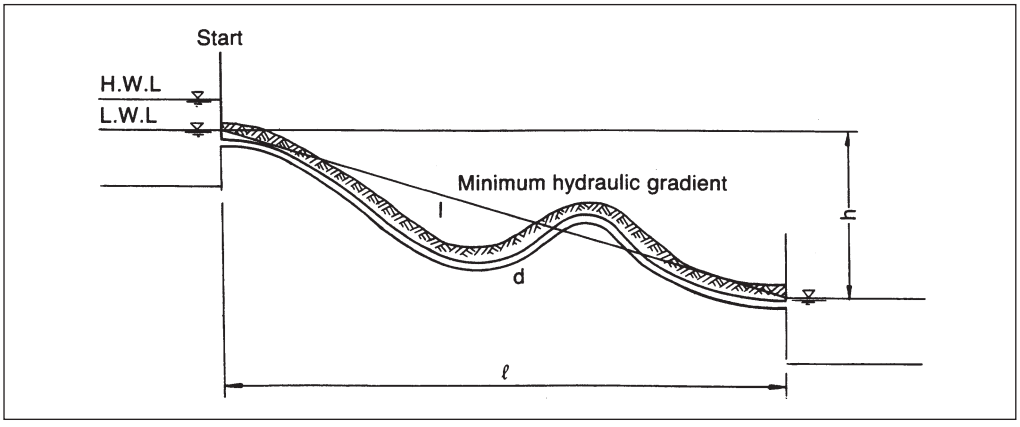

Counterplan with a change in pipe size Fig. 2-4

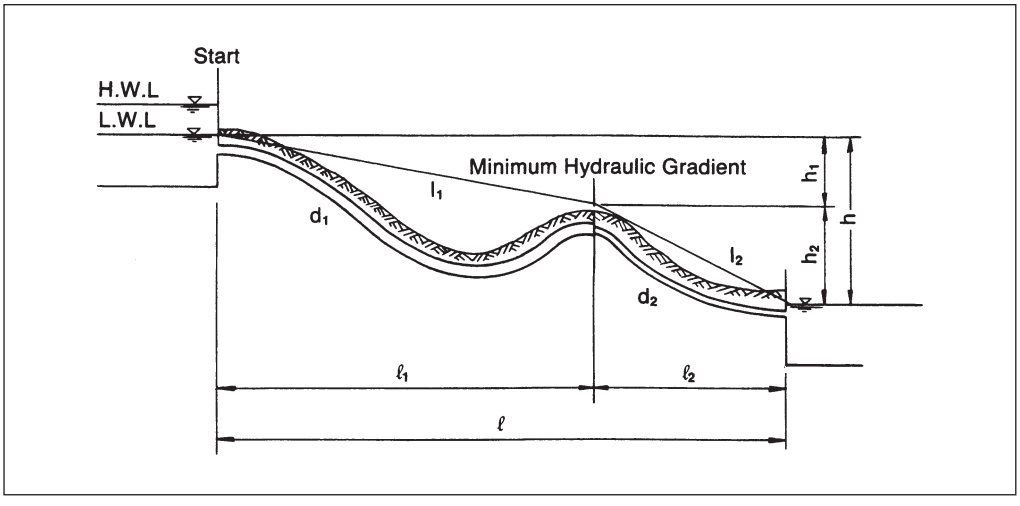

(4) Dual-pipeline may be desirable in such sections where recovery of hydraulic gradient seems difficult because of lack of connections with other pipelines in emergencies, or throughout the entire route.

(5) Pipeline route should be decided so that the pipeline is not laid in unstable locations as far as practical, such as where landslide might be expected, a steep ascent and immediate foot and edge of slope, etc.
When it is unavoidable to lay pipeline in such areas, the following steps should be taken along with a sufficient survey on the geological formation of the site in question.
1) On a slope, along with adequate protection, a means of removing surface water, seepage water and ground water should be constructed to prevent erosion and collapse of the slope.
2) If pipeline must be laid quite close to or even in acutely sloped or landslide area, the least possible amount of cutting and banking of earth should be allowed. Banking or cutting of trees and bamboos often leads to collapse of sloped land. In such locations, building of aqueduct with piers or abutments, or exposed pipeline design is desirable instead of buried one.
3) For poor ground conditions such as embankments, reclaimed ground, etc, ground improvement or piling work will be required prior to pipe laying. Foundation improvement techniques include replacing of soil, lowering of water table by well-point in sandy ground, compaction of trench bedding, etc. Technique to be employed must be selected after adequate geological surveys and tests. Where a change in foundation conditions is possible and where extreme uneven settlement is expected to result, a collar which has high flexibility should be used for the irregular subsidence of the ground.
In a weak foundation, water table may be high in many cases, the pipe would be liable to float because of buoyancy forces. Countermeasures against this tendency should be devised. (See Table 11-2)

(6) Distribution pipeline should be designed, as a rule, to form a network. In areas with remarkably large differences of ground elevation, the distribution system should be divided into several pressure zones. This arrangement will ensure the required pressure in each zone and the distribution pipeline is not stressed beyond this rating.

2-3 Location and Laying Depth

In deciding the pipe location and its laying depth, the followings should be considered.

2-3-1 Location

If pipe is to be laid under a public road, the location and depth of pipe laying should be in conformity with all relevant laws as well as federal, state, and local regulations. In particular, distribution pipeline should be, in principle, laid under public roads only after giving thorough consideration to ensure it presents to future maintenance problem.
In general, the location and depth of underground facilities should correspond to the category of road and should be agreed upon between the road authority and the owners of the facilities.

2-3-2 Laying depth

The laying depth should be determined considering the surface load and other factors.
The depth of underground facilities is specified in order to prevent the pipe from damages by earth pressure and vehicle loads. Consequently the required depth will vary depending on the soil, surface conditions, grade and class of the road, as well as the structure and size of the pipe.

Under public roads, pipe is generally laid with a standard earth cover depth of 1.2m. However, where the standard depth cannot be maintained, it might be allowable to reduce the earth cover to a minimum of 0.6m. In case of less than 0.6m, it is recommended strengthening the pipe and protecting the pipe from damage by paving the road with concrete slab on the road surface above the pipe, or by using a box- or gate-type concrete rigid frame around the pipe.
In any case, the larger the size of pipe, the deeper the earth cover required. If pipe is laid under a sidewalk, or if the site is for the exclusive use of waterlines where no vehicular traffic is permitted, a shallow cover of earth is allowable. However, where the water table is high and threatens to float the pipe, it should be laid with enough earth cover to prevent floating. (See Table 11-2)
During pipe laying, stagnant water in the excavated trench may float the pipe, therefore backfilling should be completed as soon as possible.
Where the surface load is light, the earth cover may be reduced. But the depth should not be so shallow as to adversely affect the installation of fire hydrants or valves, the connection of private sewers, or the installation of gas service pipe.

2-3-3 Distance from underground facilities

When the pipe is buried across or close to other underground facilities, at least 0.3m distance from them should be maintained. When there is no interspace between the water main and other underground facilities, not only the maintenance and repairs of the pipeline become difficult, but the concentrated load is likely to work around the contact point, therefore, a minimal distance or interval at the time of pipe laying must be maintained.

2-3-4 Laying in unsuitable areas

When pipe is inevitably buried in unsuitable areas from the topographical point of view, necessary steps to maintain soil stability must be employed after adequate surveys. In situation where it is necessary to lay pipes in a location with unstable foundation such as the site of possible landslide, acute slope, top of the slope, etc., adequate surveys to determine the soil conditions, geological formation, behavior of underground water, etc. should be conducted. Afterwards, the required protective steps, including selection of laying condition and depth, landslide prevention, foundation work, pipe protective devices, etc. should be carried out.
In particular, in the situation where small cracks permeate the ground and invite or advance slope failure, the utmost attention should be paid to the execution of protective work. When large size pipe is to be laid, in order that the pipe does not interfere with groundwater flow, an infiltration pipe should be laid at right angles to the main to facilitate flow of ground water.

2-3-5 Laying in cold regions

Pipe laying depth in the cold regions should be larger than the freezing depth. In case the laying depth cannot be determined, adequate protective steps such as use of adiabatic mats should be considered.

Chapter 3 Layout of Pipeline

3-1 General

The problems involved in surveying and planning the pipeline route are affected by both the size of the pipe and its location. More attention to details and precautions is necessary as the pipe size increases and when the pipeline passes from rural to urban areas. In general, plan and profile together with certain other details are necessary for any water pipeline route selection.
These should show:

1) Horizontal and vertical distances, either directly or by survey station and elevation If slope distances are given, this fact should be stated.
2) Location of bends and their angles, both horizontal and vertical (points of intersection preferred)
3) Angle of bends, degree or radius of curves, tangent distances on curves, or external distances if clearance is required
4) Points of intersection with pipe centerline for tees or other branches, together with direction (right or left, up or down) or deflection angle of flow viewed from inlet end
5) Location and size of all valves, pumps or other on-line fittings
6) Location of adjacent or interfering installations or structures
7) Tie-ins with property lines, curb lines, road or street centerlines, and other pertinent features necessary to define right-of-way and locate pipe centerline clearly
8) Details or descriptions of all specials together with other required data
9) Details, dimensions, and class designation or other description of all flanges
10) Any special requirements affecting the manufacture of the pipe or installation procedures

Investigation of soil conditions may be necessary to determine the external protective coating requirements, excavation procedures, allowable bearing capacity of the ground, or design of thrust blocks. The location of the water table may affect the design and installation of the pipe. Soil boring may be desirable where large and heavy water pipelines are involved.

3-2 Pipeline Facilities

Once the pipeline route and operation conditions are established, it is important to choose and correctly install the various kinds of valves and other facilities which will ensure the reliable and economical operation of the pipeline.

3-2-1 Air relief valve

Removal of air from the pipeline is the most important factor affecting the reliability and stability of water supply.

1) Air relief valves should be installed either on the summit in the pipeline, or in absence of a summit between two stop valves, directly below the stop valve located higher.
   The “summit” mentioned here does not mean the highest point throughout the pipeline, but rather local highest point such as in sub-section between two valves, water-bridge pipe or aqueduct. Even when neither a summit point nor a concave part exists between two stop valves and the distance is long, provision for air relief valves at adequate intervals such as every 500m to 1km is recommended. However, with distribution sub-mains, where there is a constant possibility of air being released or introduced via service installations or fire hydrants, there is no particular need for the installation of the air relief valve if air releases via fire hydrants is possible.

Positions of valves

Fig. 3-1

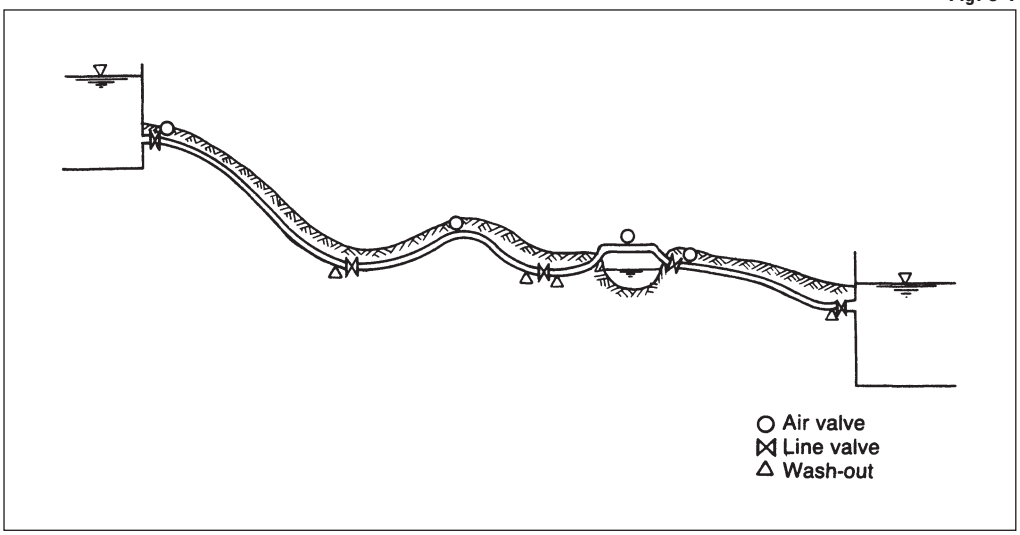

2) Double-orifice air relief valve or rapid-exhaust air relief valve is recommended for DN400 and larger pipes.
   For DN800 and larger pipes, use of tees with DN600 flanged branch and flanged cover incorporated with air relief valve would prove convenient from the maintenance standpoint. Even for pipes smaller then DN400, use of double-orifice air relief valve is recommended if the passage of air is considered.
   If pipe size is exceptionally large, special devices should be considered.
3) With air relief valve, isolating valve should be installed, if necessary, for convenience in replacement or repairs of the air relief valve.
4) If pipes are buried underground, a protecting valve box should be provided. When valve box is installed in where groundwater table is high, connecting pipe of sufficient height should also be installed to protect the air relief valve from backflow of contaminated water. The valve box may be of reinforced concrete or reinforced concrete blocks with iron cover and should afford access to repairmen. The foundation should be constructed so as to avoid the direct contact with the main. (Refer to Appendix 2)
   In cold regions, valve box cover should be of double wall construction to prevent freezing of the valve, and the box should be filled with suitable thermal insulation material.

3-2-2 Stop valve

It sometimes becomes necessary to stop the supply of water in the pipeline because of service problems, repair work, draining for cleaning, branch connection work, maintenance requirements, etc. An effort should be made to restrict the affected service area to the minimum. For this reason, an adequate number and type of stop valves such as gate (sluice) valves, butterfly valves, etc. must be provided in the pipeline.

1) Stop valves should be provided so that the fewest possible number need to function in order to limit the area affected by the shutdown of water supply as small as possible.
   It is recommended providing two stop valves at the branching points and three valves at the intersections to be able to stop the flow at each pipeline. For a long pipeline, installation of stop valve at every 1 km to 3 km is recommended to allow for partial suspension of the service.
2) Stop valves should be installed at important inverted siphons, bridges, before and after railroad crossing, blow-off pipes and in the connecting pipes to the distribution pipeline.

3) When the pressure difference is large at the both sides of the closed valve, operation for opening and closing might become difficult. For this reason, it is recommended providing a by-pass valve on the stop valve with pressure difference of above 4 bar and pipes of above DN400. The by-pass valve should be operated in advance of the main valve so that the pressure at both sides of valve becomes equal and the main valve can be operated easily. Also by-pass valve will help on a small scale to control the flow rate and pressure of the main.
4) Valves should be protected by valve box or valve chamber.
(Refer to Appendix 2)

3-2-3 Wash-out (Blow-off) facilities

To discharge soil, sand and grit remaining in the pipeline after installed, and to clean the inside of the pipeline or to remove stagnant water in the pipeline, wash-out facility should be installed.

1) Wash-out facility should be provided at the depression portion of the pipeline. Where there is a river or channel adequate for drainage near the pipeline, wash-out facility should be provided in the vicinity of such point if possible. In addition, it is recommended providing water sampling equipment with the wash-out facility to allow the check of water quality.
If there is no adequate drain channel, a long drainage pipeline might be required. The drainage pipe should be equipped with a stop valve. Stop valve should also be provided on the main pipeline.
There are two systems for stop valve installation: 1) providing two valves, one on each side of the wash-out; and 2) providing two wash-outs, one on each side of the stop valve on the main.
2) The standard size of wash-out pipe is 1/3 to 1/6 the size of the mains. If discharge into existing waterway is possible, the size may be enlarged.
3) When the water level in the outlet facility is higher than the bottom of the main, drainage chamber should be provided between the drainage pipe and discharge outlet if necessary.
The outlet of the drainage pipe should be located higher than the high water level of the drain channel to prevent backflow of discharged water. When the water level of the drain channel is situated higher than the bottom of the main, the drainage pipe may be designed higher than the discharge water level of the channel if required simply for discharge of clean-out water. For emptying the pipeline, pumping discharge method should be devised by providing catch pit on the way to the discharge outlet. (See Fig. 3-2)

Example of wash-out facilities

Fig. 3-2

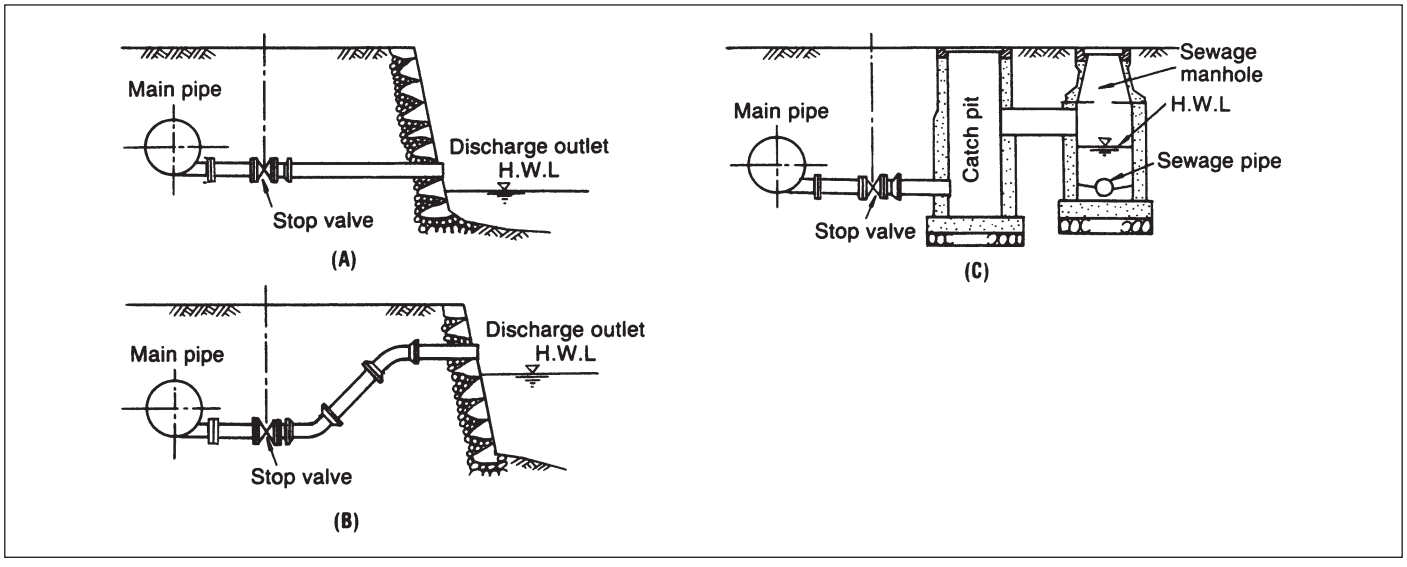

4) The revetment near the discharge outlet should be thoroughly protected from erosion and damage by discharged water.
   If there is a fear of the area near the discharge outlet being eroded or broken up by large amounts of discharged water, protection should be devised using concrete structures, wire cylinders, gravel, etc. For temporary use, steel sheet piling, rafted timber, etc. should be used. There is another method in which catch pit is built of reinforced concrete. In such construction, the water discharged from the wash-out is allowed to dash against the wall to kill the force of water. In this case, the overflow outlet should be enlarged in width to the greatest possible extent to reduce the flow rate.
   It is recommended providing fences around the outlet facility for safety.

3-2-4 Pressure reducing valves and safety valves

1) For connecting a pipeline between service areas with different pressures, pressure reducing valve (or reducer valve) must be provided so that excessive pressure will not cause problems in water system operation and maintenance, or that such pressure will not exceed the allowed maximum pressure.
2) Pressure reducing valves must also be provided at pump outlets, and at spots where water hammer is likely to occur. However, no pressure reducing valve is needed where other pressure controlling devices, e.g., tanks, etc. are installed.

3-2-5 Fire hydrants

1) Fire hydrants should be provided in locations convenient for the fire fighting activities, e.g. street intersections branches, etc., and especially where distribution pipes converge and water collection is expected.
   In addition to these locations, hydrants should be provided at certain intervals, such as every 100 m to 200 m depending on the situation of buildings and houses along the streets or road.
2) Single-jet hydrants should be installed on DN150 and larger pipes, and double-jet hydrants on DN300 and larger pipes. However, even on pipes smaller than DN150, double-jet hydrants can be used provided adequate function in the network can be expected, when water pressure is high, or when large size pipe is provided in the vicinity and the supply of fire fighting water is judged satisfactory. Fire hydrant should be equipped with isolating valve in view of the need for maintenance including shut-down of water supply for repairs, etc.
3) In the snowy regions, unless traffic will be interrupted frost-resistant surface type hydrant should be provided. Also, in this case, for protection of freezing, non-freezing type should be employed. If underground type is adopted, either hydrant box must be designed with double covers or insulating material must be filled in the box.

3-2-6 Flow meters and pressure gauges

1) It is recommended installing flow meter at the starting point of the pipeline to check the flow rate. The flow meter shall be capable of measuring and recording the normal demand and the minimum and maximum demands.
2) Flow meter shall be equipped with devices for indicating, integrating and recording.
3) It is recommended installing self-recording pressure gauges and flow meters, at appropriate spots in service area, for effective and economical operation of the pipeline system.

3-2-7 Manholes

For DN800 and larger pipeline, it is recommended providing manholes where needed for pipe inside inspection and maintenance.
Manholes should be provided at locations where problems are liable to occur, such as aqueducts, inverted siphons, stop valves, etc., and where there are obvious topographical or geological variations and at other locations considered to be required. Also where earth cover is deep, inspection and repair from pipe outside is difficult, and providing manholes at these locations is in order.
Manhole should, in general, be DN600 in size and closed with blank flange, incorporated usually with air relief valve. There is a possibility of manhole chamber being filled with toxic gases or lack in oxygen, so prior to entering, atmospheric condition in the manhole chamber must be checked with detectors.

Chapter 4 Pipe Diameter Selection

4-1 General

The volume of water delivered through a pipeline depends on the following factors:

1) Head (or pressure) of water available at the source, i.e. pump or reservoir
2) Difference of elevation between source and discharge point
3) Diameter of pipeline
4) Friction head loss caused by pipeline
5) Friction head losses caused by fittings, valves, etc.

The diameter of the pipeline is thus selected based on the head (pressure) loss.

4-2 Calculation of Head Loss

The head loss of the pipeline is expressed as a function of pipe diameter, pipeline length and flow velocity of water in the pipeline by the general formula:

$$h = f \frac{L}{D} \frac{V^2}{2g}$$

Where, h : Head loss (m)
L : Length of pipeline (m)
D: Diameter of pipe (m)
(Normally nominal diameter presented in meter is used.)
V : Flow velocity (m/s)
g : Acceleration of gravity (= 9.8 m/s^2)
f : Head loss coefficient

The coefficient “f” is a function of the flow velocity, the liquid conveyed and characteristics of the pipeline (diameter and surface condition of the pipe). There are numerous formulas for the calculation of “f”.

4-2-1 Hazen-Williams formula

For water pipeline, Hazen-Williams formula is commonly used.

$$V = 0.35464 C_H D^{0.63} I^{0.54}$$
$$Q = 0.27853 C_H D^{2.63} I^{0.54}$$
$$I = 10.666 C_H^{-1.85} D^{-4.87} Q^{1.85}$$

Where, C_H : Coefficient
For cement mortar or epoxy lined ductile iron pipe, a C_H value of 150 can be used; however for design purpose, 130 is recommended, which includes losses in fittings, valves and other facilities, plus some allowance.
I : Hydraulic gradient (unit head loss of the pipeline) = h/L
Q : Flow volume (m^3/s)

Calculation charts by Hazen-Williams formula are shown inFig.4-1 and 4-2.

Flow calculation chart by Hazen-Williams formula (C_H = 150)

Fig. 4-1

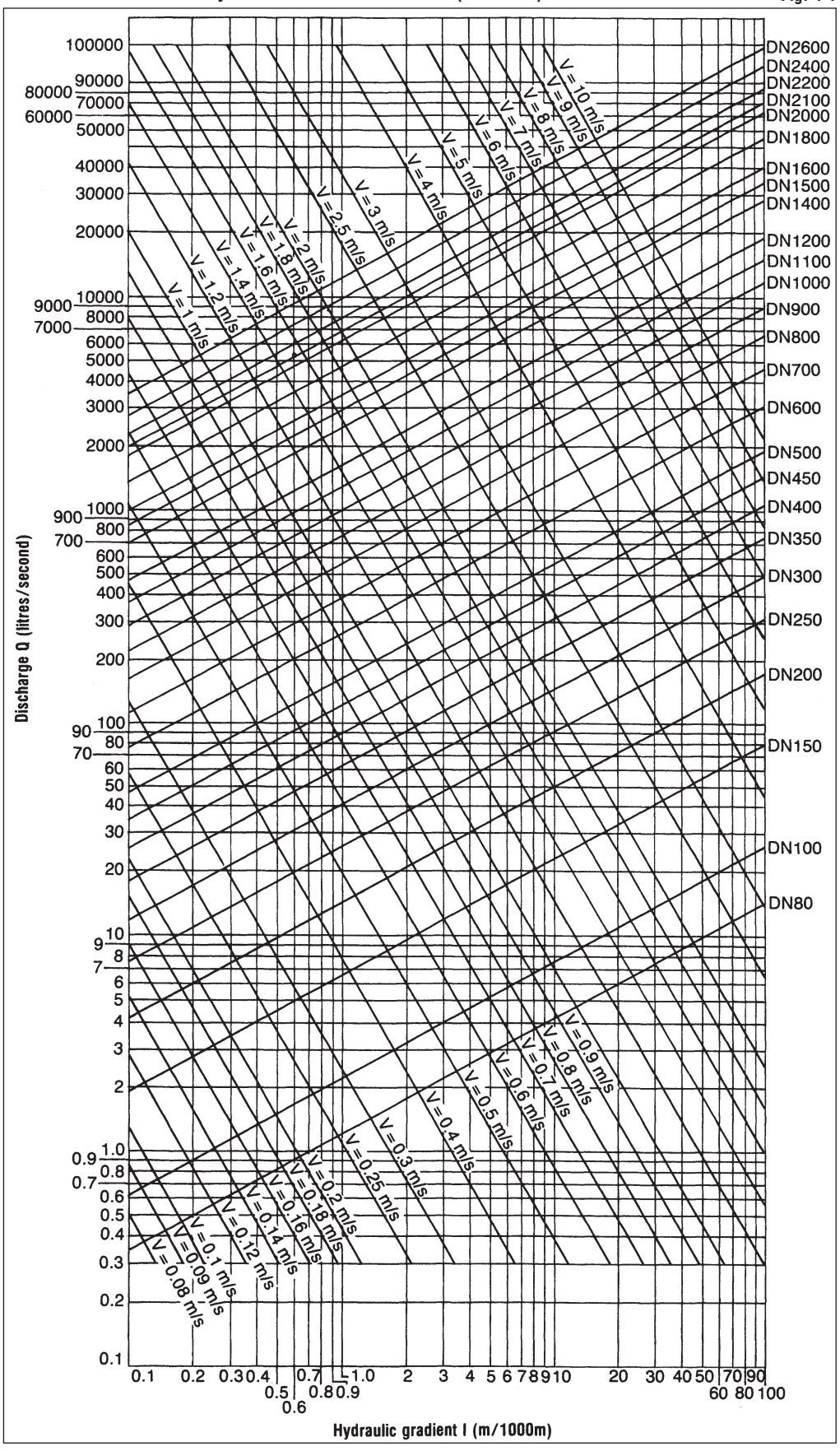

Flow calculation chart by Hazen-Williams formula (C_H = 130)

Fig. 4-2

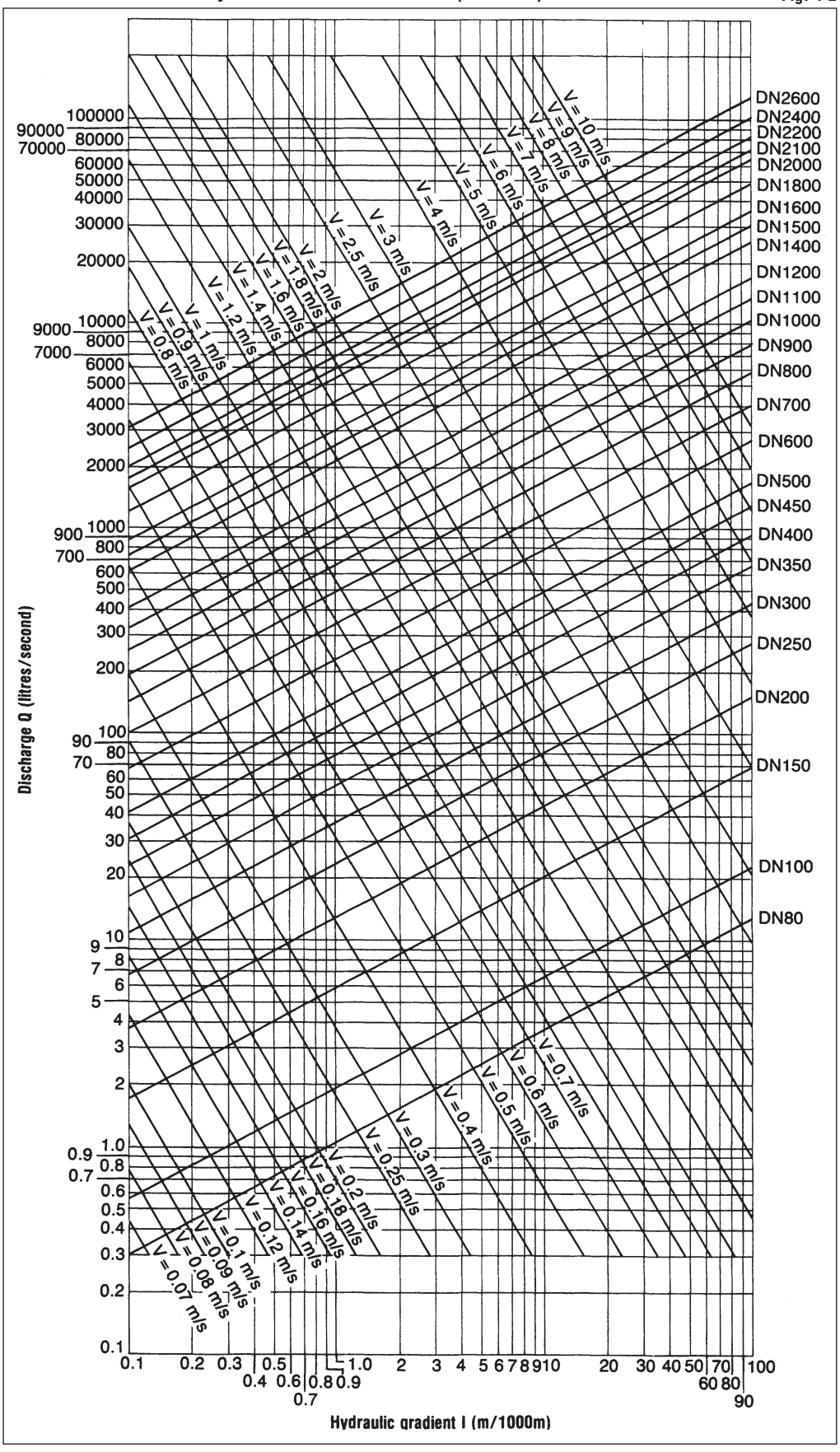

4-2-2 Colebrook-White formula

Other than Hazen-Williams formula, Colebrook-White formula is used.

$$\frac{1}{\sqrt{f}} = -2\log\left(\frac{K}{3.7D} + \frac{2.51}{Re\sqrt{f}}\right)$$

Where, K : Linear measure of pipe interior roughness
For cement mortar or epoxy lined ductile iron pipe, a K value of 0.03 can be used; however for design purpose, 0.1 is recommended, which includes losses in fittings, valves and other facilities, plus some allowance

Re : Reynolds number

$$Re = \frac{VD}{\nu}$$

ν : Kinematic viscosity of the fluid conveyed
For water, $\nu = 1.31 \times 10^{-6}$ m²/s at 10°C

This formula has a disadvantage of being difficult to use. For this reason, calculation charts shown in Fig. 4-3 and 4-4 are commonly used.

4-2-3 Manning formula

For gravity sewer pipeline, Manning formula may be used.

$$V = \frac{1}{n} R^{2/3} I^{1/2}$$

Where, n : Coefficient
For cement mortar or epoxy lined ductile iron pipe, an n value of 0.0010 to 0.0013 can be used.

R : R = A/P (m)

A : Sectional area of pipe (m^2)

P : Circumferential length of pipe to be contacted with the fluid (m)

Flow calculation chart by Colebrook-White formula (K = 0.03)

Fig. 4-3

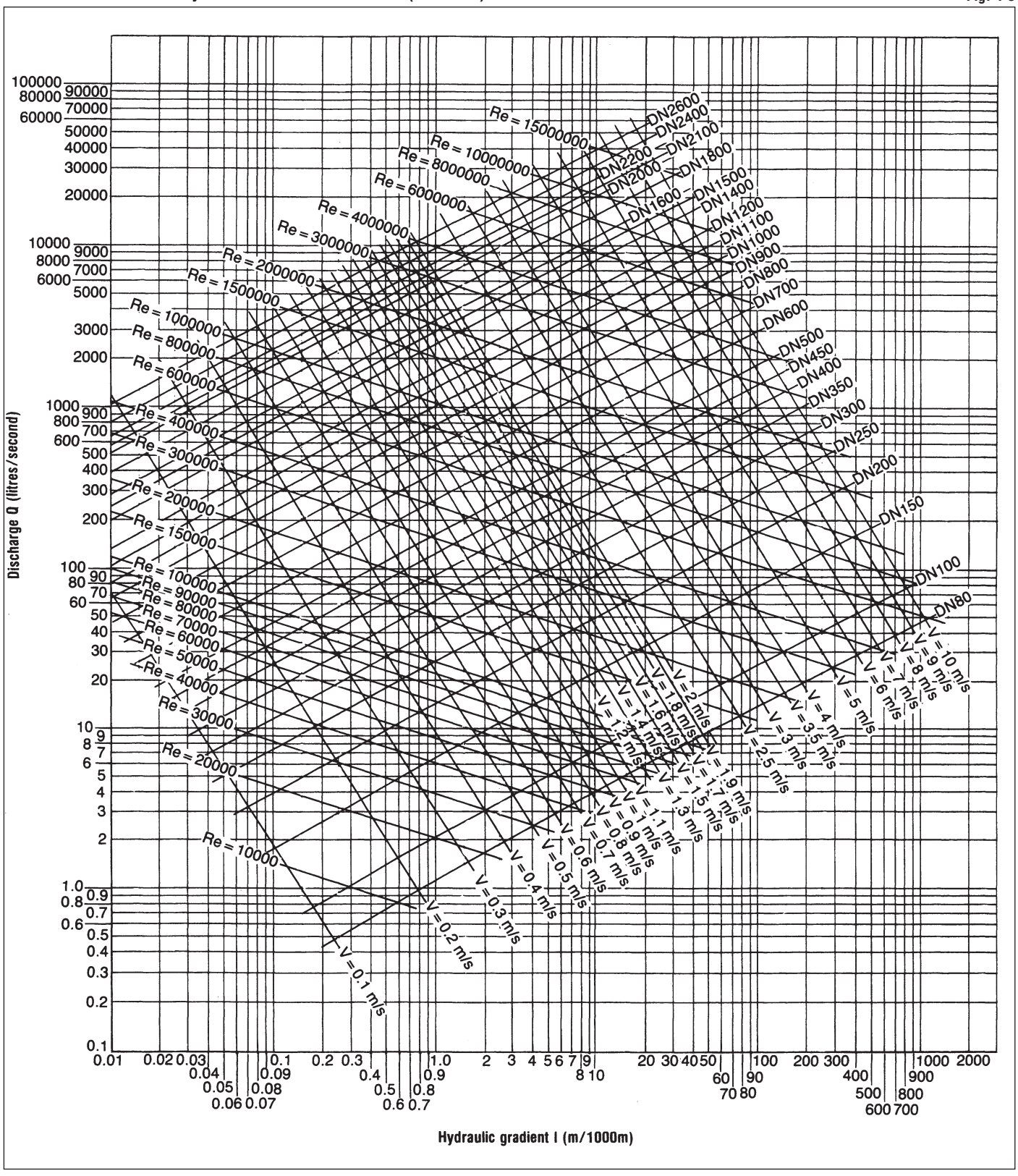

Flow calculation chart by Colebrook-White formula (K = 0.1)

Fig. 4-4

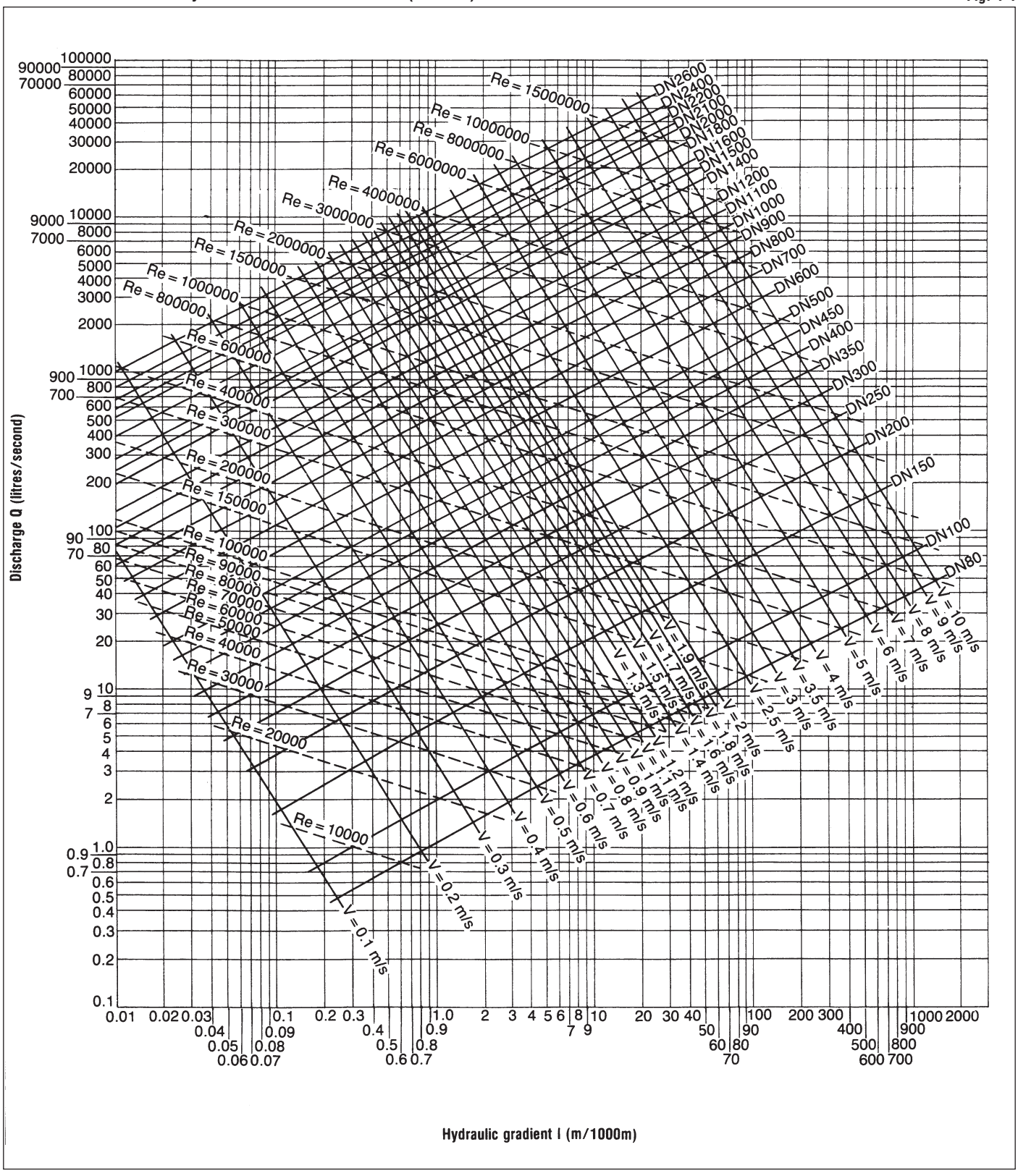

4-2-4 Losses through fittings and valves

The minor head losses due to fittings such as bends are occasionally ignored in long pipelines, and losses in water mains which include relatively small quantities of fittings can be calculated as straight pipelines using the coefficient value C_H = 130 in Hazen-Williams formula or K = 0.1 in Colebrook-White formula. However, the head losses through fittings might be significant and should be taken into consideration in short pipeline with a high flow velocity.

The head losses through fittings can be calculated from the following formula:
(1) Head loss due to flowing-in water

$$h_i = f_i \frac{V^2}{2g}$$

Where, h_i : Head loss due to flowing-in water (m)
f_i : Coefficient of loss due to flowing-in water

Coefficient of loss due to flowing-in, "f_i"

Table 4-1

Shape	Condition of edge surface	Value of "f_i"	Shape	Condition of edge surface	Value of "f_i"
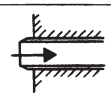	Sharp edge	1.30	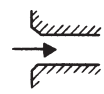	Chamfered edge	0.25
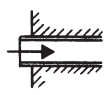	Mild edge	0.60	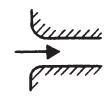	Roundish	0.10 — 0.20
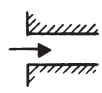	Square edge	0.50	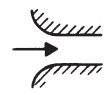	Bell mouth	0.01 — 0.06

(2) Head loss due to bend

$$h_b = f_b \frac{V^2}{2g}$$

Where, h_b : Head loss due to bend (m)

f_b : Coefficient of loss. According to Weisbach;

$$f_b = \{0.131+1.847\left(\frac{r}{R}\right)^{3.5}\}\frac{\theta}{90}$$

Fig. 4-5

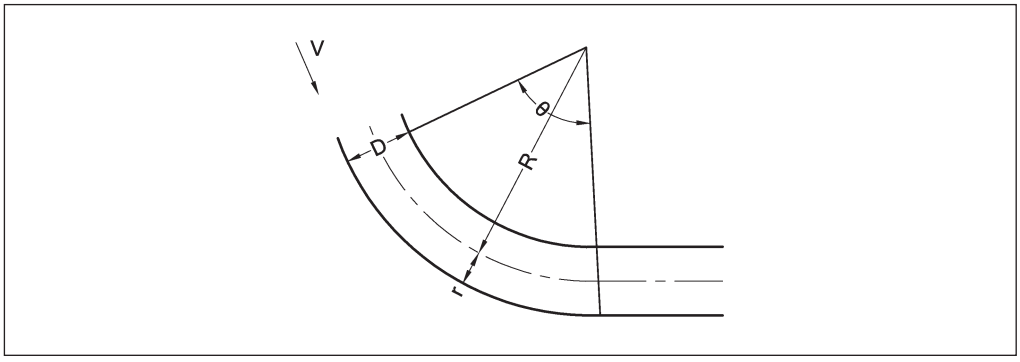

Coefficient of loss, "f_b" at θ =90°

Fig. 4-6

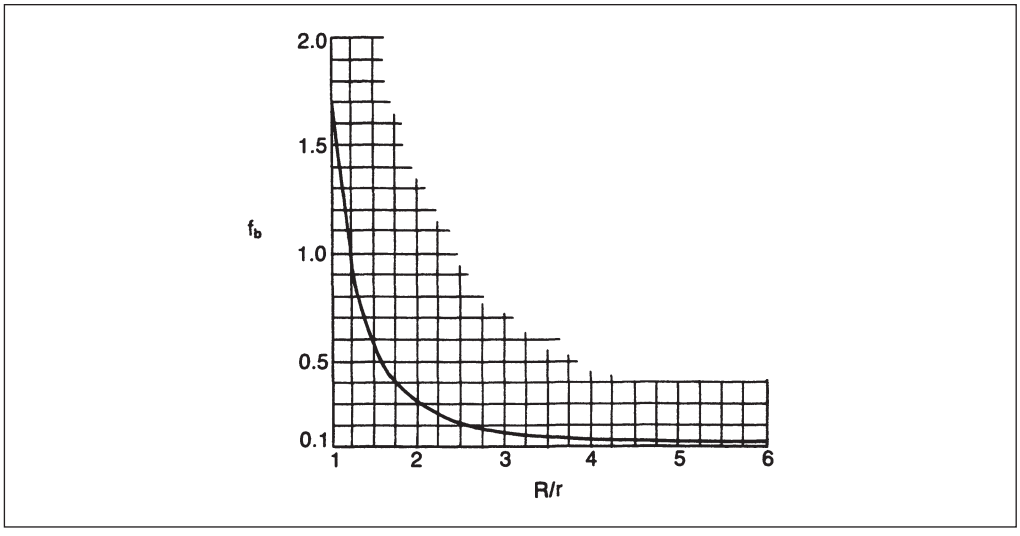

Notes: (1) The Weisbach formula well conforms with the smooth round pipe of R/r<6, but when it is rough the value becomes about double what is obtained from the formula.

(2) The "f_b" is inclusive of the friction loss of the bent parts.

(3) Head loss due to change in section or diameter

1) In the case of gradual expansion

$$h_{ge} = f_{ge}\frac{(V_1-V_2)^2}{2g}$$

Where, h_{ge} : Head loss due to gradual expansion (m)

f_{ge} : Coefficient of loss

$$f_{ge} \fallingdotseq 3.5(\tan\frac{\theta}{2})^{1.22}$$

V_1 : Flow velocity before gradual expansion (m/s)

V_2 : Flow velocity after gradual expansion (m/s)

θ : Gradual expansion angle (degree)

Fig. 4-7

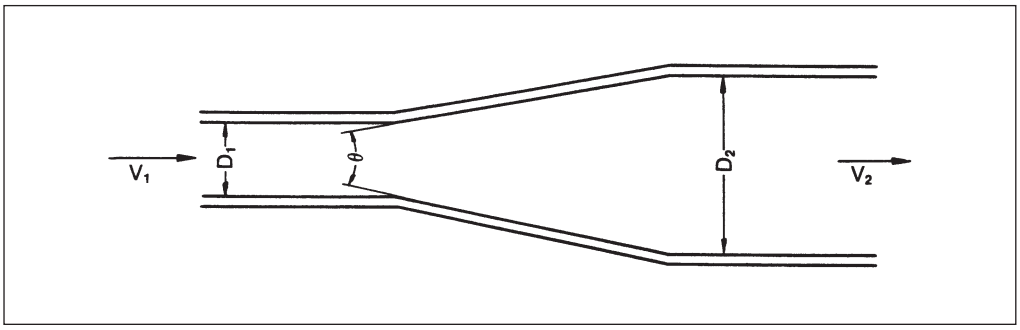

Coefficient of loss due to gradual expansion, f_{ge}

Table 4-2

D_2/D_1 \ $\theta°$	2	4	6	8	10	15	20
1.1	0.01	0.01	0.01	0.02	0.03	0.05	0.10
1.2	0.02	0.02	0.02	0.03	0.04	0.09	0.16
1.4	0.02	0.03	0.03	0.04	0.06	0.12	0.23
1.6	0.03	0.03	0.04	0.05	0.07	0.14	0.26
1.8	0.03	0.04	0.04	0.05	0.07	0.15	0.28
2.0	0.03	0.04	0.04	0.05	0.07	0.16	0.29
2.5	0.03	0.04	0.04	0.05	0.08	0.16	0.30
3.0	0.03	0.04	0.04	0.05	0.08	0.16	0.31
∞	0.03	0.04	0.05	0.06	0.08	0.16	0.31

D_2/D_1 \ $\theta°$	25	30	35	40	45	50	60
1.1	0.13	0.16	0.18	0.19	0.20	0.21	0.23
1.2	0.21	0.25	0.29	0.31	0.33	0.35	0.37
1.4	0.30	0.36	0.41	0.44	0.47	0.50	0.53
1.6	0.35	0.42	0.47	0.51	0.54	0.57	0.61
1.8	0.37	0.44	0.50	0.54	0.58	0.61	0.65
2.0	0.38	0.46	0.52	0.56	0.60	0.63	0.68
2.5	0.39	0.48	0.54	0.58	0.62	0.65	0.70
3.0	0.40	0.48	0.55	0.59	0.63	0.66	0.71
∞	0.40	0.49	0.56	0.60	0.64	0.67	0.72

2) In the case of gradual contraction

$$h_{gc} = f_{gc}\frac{V_2^2 - V_1^2}{2g}$$

Where, h_{gc} : Head loss due to gradual contraction (m)
f_{gc} : Coefficient of loss

$$f_{gc} = 0.025/8 \sin\frac{\theta}{2}$$

V_1 : Flow velocity before gradual contraction (m/s)
V_2 : Flow velocity after gradual contraction (m/s)
θ : Gradual contraction angle (degree)

Fig. 4-8

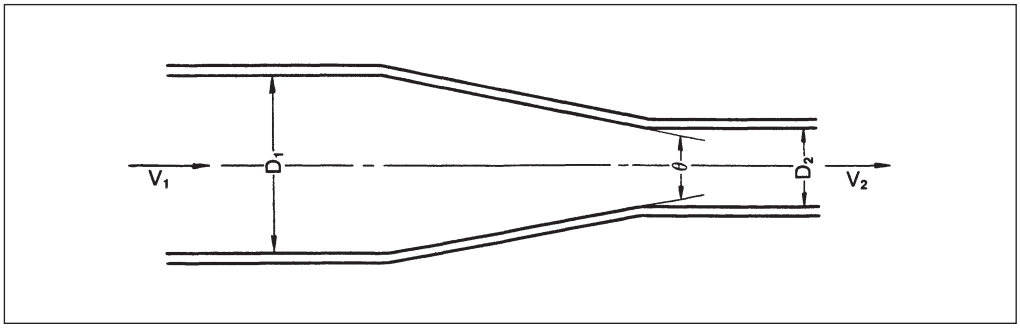

(4) Head loss due to branching

$$h_n = f_n\frac{V^2}{2g}$$

Where, h_n : Head loss due to branching (m)
f_n : Coefficient of loss due to branching
V : Flow velocity before branching (m/s)

Fig. 4-9

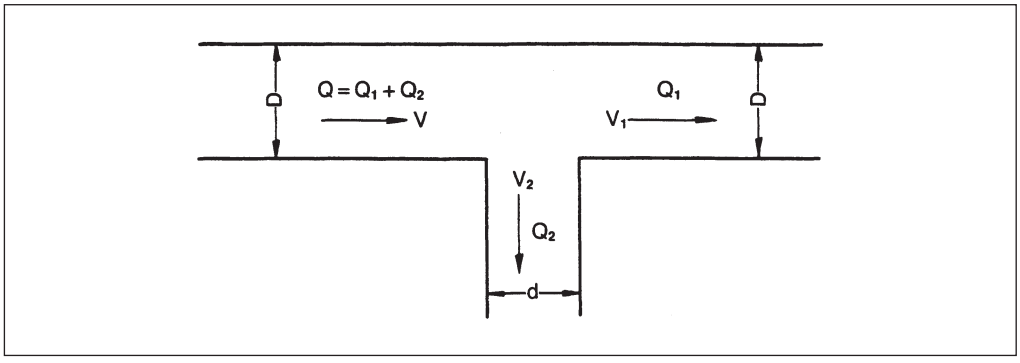

Coefficient of loss due to right angle branching, f_n

Table 4-3

Q_2/Q		0.25		0.5		0.75	
d/D		0.35	0.58	0.35	0.58	0.35	0.58
Corner at branch	Squarish	3.9	1.6	13.7	3.2	28.2	6.4
	Roundish	2.9	1.35	12.2	2.1	26.4	3.8

Fig. 4-10

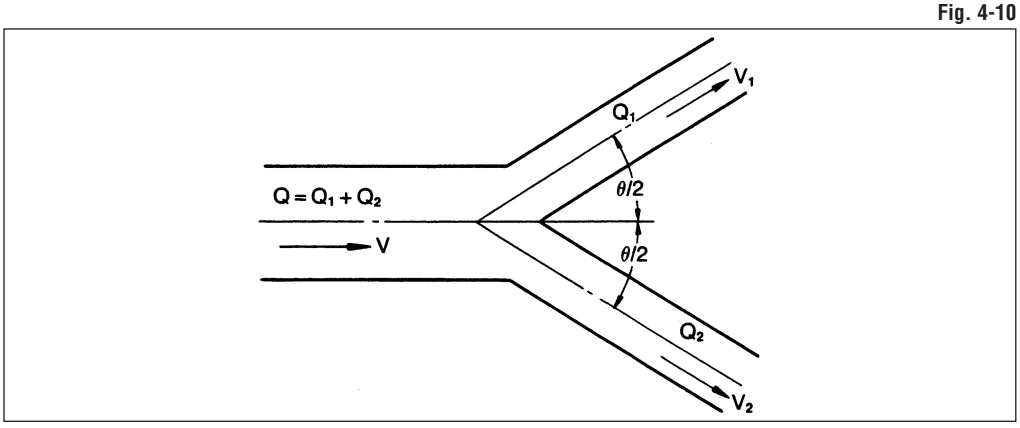

Coefficient of loss due to "Y" branching, f_n Table 4-4

Shape of branching	f_n
Conical	0.50
Cylindrical	0.75

(5) Head loss due to valves

$$h_v = f_v \frac{V^2}{2g}$$

Where, h_v: Head loss due to valve (m)
f_v: Coefficient of loss due to valve opening

Coefficient of loss due to valve opening, f_v Table 4-5

Kind of valve	Opening of valve and fv value														
Sluice valve 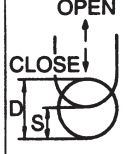	For 40mm pipe diameter														
	S/D	1/8	1/4	3/8	1/2	5/8	3/4	7/8	1	The bigger the pipe diameter, the smaller the f_v.					
	a/A	0.159	0.315	0.466	0.609	0.740	0.856	0.948	1.00						
	f_v	97.8	17.0	5.52	2.06	0.81	0.26	0.07	0.0						
	For large diameter pipe (Knichling and Smith)														
	S/D	0.05	0.10	0.20	0.30	0.40	0.50	0.60	0.70	0.80					
	a/A	0.05	0.10	0.23	0.36	0.48	0.60	0.71	0.81	0.89					
	f_v (D = 610mm)	235	100	28	11	5.6	3.2	1.7	0.95	—					
	f_v (D = 762mm)	333	111	23	9.4	5.2	3.1	1.9	1.13	0.60					
Cock Open 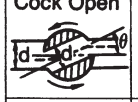	θ°	5	10	15	20	25	30	35	40	45	50	55	60	65	82°7′~30′
	a/A	0.93	0.85	0.77	0.69	0.61	0.53	0.46	0.38	0.31	0.25	0.19	0.14	0.09	0.0
	f_v	0.05	0.29	0.75	1.56	3.10	5.47	9.68	17.3	31.2	52.6	106	206	486	∝
Butterfly valve 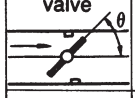	θ°	5	10	15	20	25	30	35	40	45	50	60	70	90	
	a/A	0.91	0.83	0.74	0.66	0.58	0.50	0.43	0.36	0.29	0.23	0.13	0.06	0.0	
	f_v	0.24	0.52	0.90	1.54	2.51	3.91	6.22	10.8	18.7	32.6	118	751	∝	
Check valve	θ°	15	20	25	30	35	40	45	50	55	60	65	70		
	f_v	90	62	42	30	20	14	9.5	6.6	4.5	3.2	2.3	1.7		
Disc valve 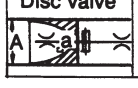	$f_v = (1.645 \frac{A}{a} - 1)^2$ A: Sectional area of pipe a: Minimum sectional area of the conical part														

(6) Head loss at pipe ends

$$h_e = f_e \frac{V^2}{2g}$$

Where, h_e : Head loss at pipe end (m)
f_e : Coefficient of loss

At the discharge outlet, due to the resistance of water in the tank, the energy of running water is exhausted and changed into pressure head, therefore f_e is set to $f_e \fallingdotseq 1.0$.

Fig. 4-11

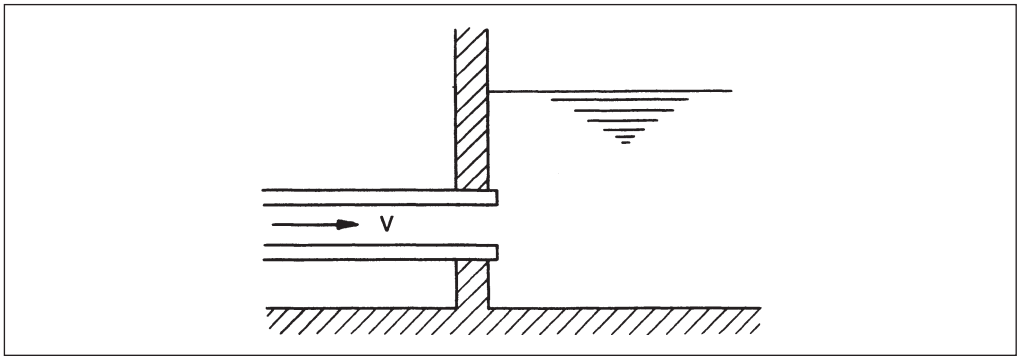

4-2-4 Losses by ordinary field curvature

Losses that occur as a result of the slight deflection permissible in standard field joints are accounted for by the conventional flow formulas themselves, and it is usually not necessary to make allowance for such losses.

4-3 Examples of Pipe Diameter Selection

4-3-1 Example 1 (Pumping main)

120 m³/h of water is required at the delivery point 4000m away from the water source. The delivery point is 75m higher than the water source. The head available at the source is 145m and the required head at the delivery point is 20m. What nominal diameter of pipe is required?

Fig. 4-12

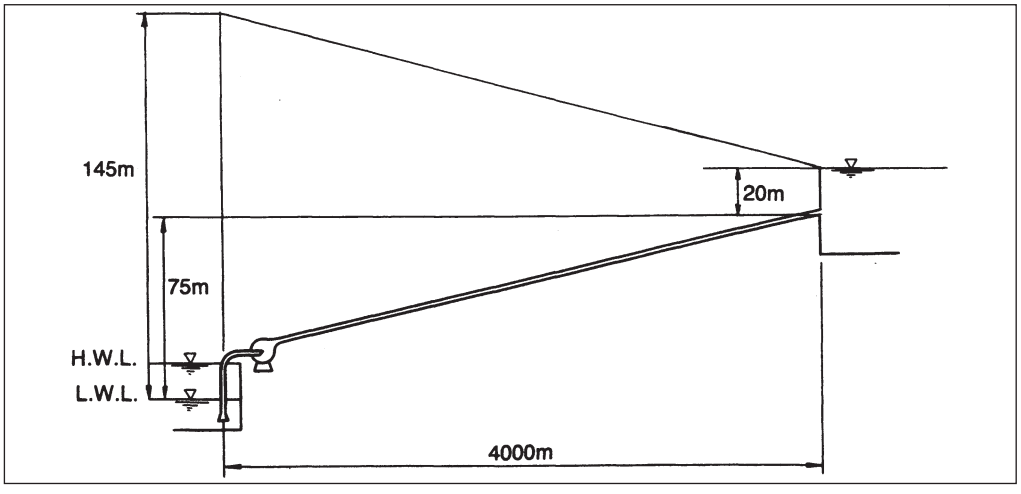

Discharge: Q = 120 m^3/h = 33.3 ℓ/s
Allowable loss of head due to the difference in elevation and required head at the delivery point: 145 – (75 + 20) = 50 m
Equivalent loss of head (i.e., hydraulic gradient) I:

$$I = \frac{50}{(4000/1000)} = 12.5\text{m}/1000\text{m}$$

From Fig. 4-1, the point of intersection of two straight lines projected from the axis at

Q = 33.3 ℓ/s
I = 12.5m/1000m

lies, respectively, between the inclined lines which represents the pipe diameter DN = 150 and 200.
In this case, DN200 should be selected.

4-3-2 Example 2 (Gravity main)

120 m^3/h of water is required at the delivery point 4000m away from the water source. The delivery point is 12m lower than the water source. The head available at the source is 10m and the required head at the delivery point is 3m. What nominal diameter of pipe is required?

Fig. 4-13

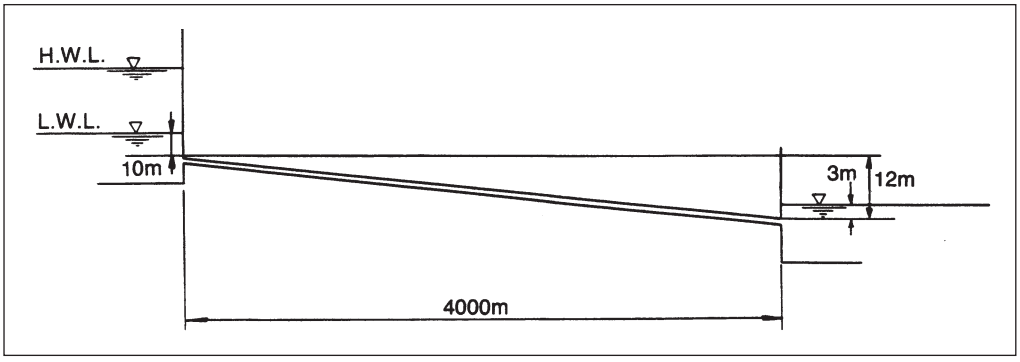

Discharge: Q = 120 m^3/h = 33.3 ℓ/s
Equivalent loss of head (i.e., hydraulic gradient) I:

$$I = \frac{10+12-3}{(4000/1000)} = 4.75\text{m}/1000\text{m}$$

From Fig. 4-1, DN200 should be selected.

4-4 Required Head and Power of Pump

4-4-1 Required pump head

Lifting water by pump from suction water source to discharge water surface (to free discharge end when discharged into the atmosphere) is illustrated in Fig. 4-14. If the vertical height between those two water surfaces is H_a, then the required head of the pump is obtained by adding to H_a, various head losses caused when the water flows through the suction and discharge pipings of the pump, the velocity head at the end of the discharge pipe and the difference of the head exerted on two water surfaces.
The obtained head called “total head” is expressed by the below equation.

$$H = H_a + h_\ell + \frac{V_d^2}{2g} + \frac{1000(P_d - P_s)}{\gamma}$$

Where, H_a : Actual head (m)
h_ℓ : Total head loss (m)
V_d : Flow velocity at the end of the discharge piping (m/s)
$V_d^2/2g$: Discharge velocity head (m)
P_d : Pressure exerted on the discharge water surface (MPa)
P_s : Pressure exerted on the suction water surface (MPa)
γ : Specific weight of pumped liquid (kN/m³)

Fig. 4-14

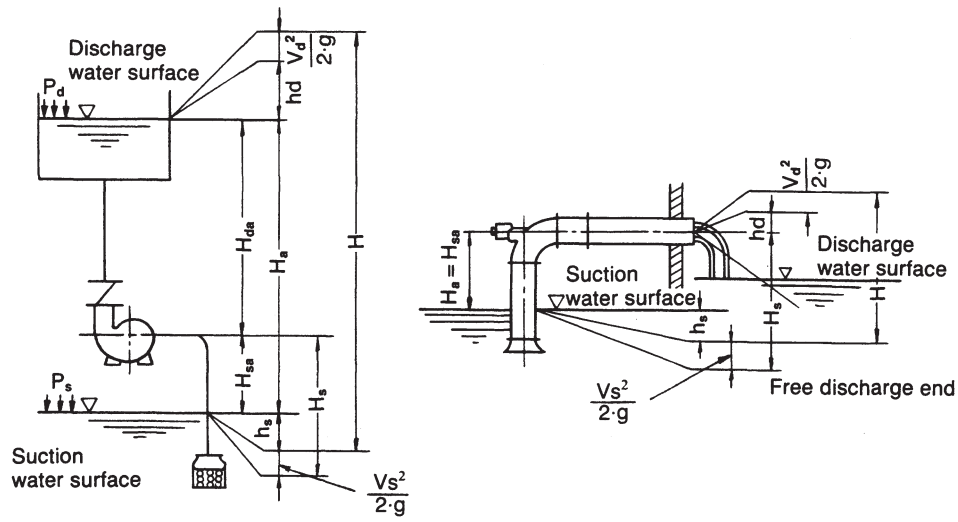

H : Total head (m)
H_a : Actual head (m)
H_{sa} : Actual suction head (m)
H_{da} : Actual discharge head (m)
H_s : Total suction head (m)
h_s : Total loss of suction head (m)
h_d : Total loss of discharge head (m)
$V_s^2/2g$: Suction velocity head (m/sec)
$V_d^2/2g$: Discharge velocity head (m/sec)

When both the suction and discharge water surfaces are open to the atmosphere, the total head of the pump is obtained by the following equation.

$$H = H_a + h_\ell + \frac{V_d^2}{2g}$$

or

$$H = H_a + H_\ell$$

Where, H_ℓ: Total head loss including the discharge velocity head (m)

4-4-2 Required power of pump

The required power of pump is obtained by the following formula.

$$P = C\,\frac{0.163\gamma QH}{\eta_p \eta_t}\ (\mathrm{kW})$$

$$= C\,\frac{\gamma QH}{4.5\eta_p \eta_t}\ (\mathrm{HP})$$

Where, P : Power required for the prime mover
C : Excess Motor ; 0.11-0.12
Engine ; 0.115-0.125
Q : Capacity of flow volume (m^3/min)
η_p : Pump efficiency (%)
η_t : Transmission efficiency (%)

Reduction gear box with horizontal spur gears;	0.92-0.98
Reduction gear box with level gears;	0.90-0.95
Flat belt;	0.90-0.93
V-belt;	0.93-0.95
Shaft coupling;	1.0

The pump efficiency η_p varies depending on the type of pump, capacity, head, rotating speed and other conditions. It is difficult to define the value of η_p in a general manner or to calculate it by a simple equation. Fig. 4-15 shows the approximate values of η_p for reference.

Approximate pump efficiency, η_p **Fig. 4-15**

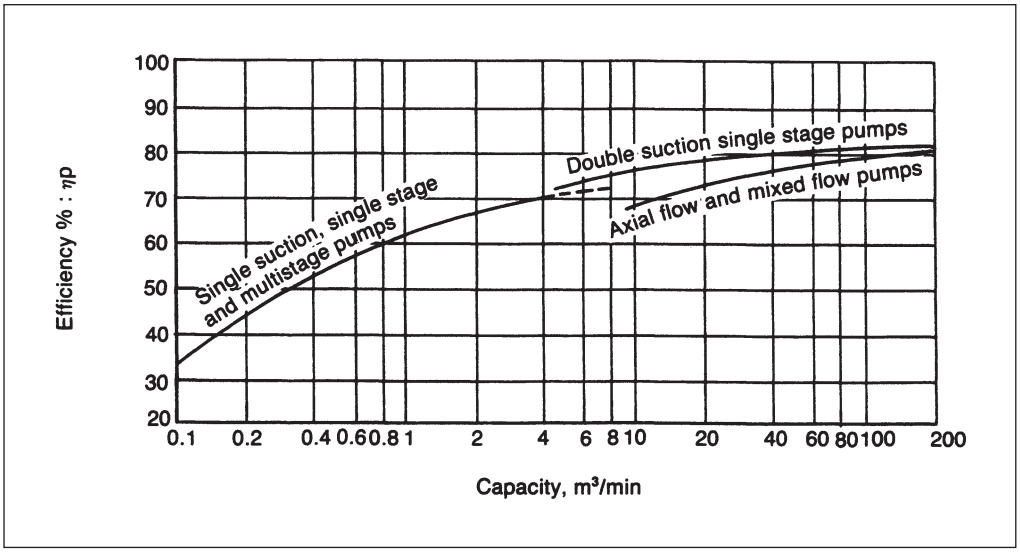

4-5 Allowable Flow Velocity

The recommended allowable flow velocity in ductile iron pipes, for design purpose, is shown in Table 4-6 and no more than 5 m/s.
Water passing through the pipeline at a high velocity will abrade the lining. High flow velocity will increase the head loss in the pipeline and requires larger pipe diameter or higher pump head. It is recommended in many cases adopting a large pipe diameter even though the initial cost is higher, because the difference of the material cost and operation cost will be fully compensated by lower operation cost.

Recommended flow velocity Table 4-6

DN	Recommended flow velocity (m/s)
80 to 150	0.7 to 1.0
200 to 400	0.9 to 1.6
450 to 800	1.2 to 1.8
900 to 1500	1.3 to 2.0
1600 to 2600	1.4 to 2.5

In case that water contains solid particles such as sand and soil to some extent, it is necessary to adopt a lower flow velocity to prevent the abrasion of the lining, however to prevent the sedimentation of them in the pipeline, the flow velocity should be not less than 0.3 m/s.

4-6 Economical Pipe Diameters

Determining the pipe diameter using hydraulic-flow formulas exclusively may not result in the best size to use. The diameter of the pipe used should be the one which results in the lowest capitalized cost. The capitalized cost is based on the costs of initial material and equipment, pipe installation, operation, pumping, maintenance, interest on the investment, and replacement. On extensive projects, it is customary to design a number of alternative pipe diameters and select the most economical and practical one.

4-6-1 Gravity pipeline

In a gravity pipeline, flow velocity should be increased as high as possible by making the maximum possible use of head drop, but within the allowable flow velocity as described in Sec. 4-5. This leads to the fact that minimum sized pipe will do the work with the minimum construction cost. In other words, in a gravity pipeline, the size of pipe will be determined by the given hydraulic conditions.

4-6-2 Pumping pipeline

In a pumping pipeline, combination of the size of pipe and head of pumps can be numerous. If pipe size is small, although the pipe laying cost decreases, flow resistance (pressure loss) will rise, hydraulic gradient will become acute, and it will be essential to increase the pump head. Thus, not only the pumping equipment cost becomes high but the power cost for pumping will be high after operation starts. In contrast, if pipe size is large, even though laying cost will naturally increase, pumping costs will be low.
In comparing the total expenses involved in the pumping system and those involved in the pipe system only with operating expenses (interest in capital layout, depreciation and maintenance costs), there can be only one, optimum economical size of pipe.

4-7 Pipe Size for Distribution Network

It is desirable to design distribution pipes in a well-balanced network to provide uniform pressure and uninterrupted service to the customers. For design of network system, Hardy-Cross method is primarily used for manual calculation purpose. This method is based on Hazen-Williams formula, and originates from the concept that the water head loss at a certain point is proportional to the square of the flow volume, i.e., $h = kQ^2$, where, k is coefficient. This calculation is to be made for each pipeline, with the water head loss initiating in the counter-clockwise direction called positive (+) and in the reverse direction, negative (-). When the pipeline is arranged in the form of network, $\Sigma h = 0$.

With this method, it is rare that the correct value is obtained from a single set of calculations, and in many instances the original value, which is simply estimated, is modified slightly and the relevant calculations are repeated over and over to bring it closer to the correct value. The sequence of calculation is:

1. The overall pipeline network is divided into a number of sub-networks.
2. Provisionally set the flow volume Q and direction of the flow for each pipeline. In normal instances, set the counter-clockwise direction as (+) and the reverse as (-).
3. Obtain h for Q of each pipeline. h and Q are the same sign.
4. Workout $h/Q = h_f Q^{n-1}$ for each pipeline, where hf is friction head.
5. Workout Σh for each sub-network.
6. Obtain $\Sigma h_f Q^{n-1} = \Sigma h/Q$ for each sub-network and further calculate $n \Sigma h_f Q^{n-1} = n \Sigma h/Q$.
7. For each sub-network, calculate the modified value ΔQ of the flow volume.
   $$\Delta Q = -\frac{\Sigma h}{1.85 \Sigma h/Q}$$
8. Set each assumed flow volume Q, to which ΔQ is added, as the primary modified flow volume of the sub-network.
9. Work out h for the primary modified flow volume and obtain Σh .
10. If Σh is not equal to 0, calculate the secondary modified flow volume according to the same method as mentioned above. Then obtain h for it.
11. Then as these calculations are repeated h will begin to approach 0. Repeat these calculations until h becomes close enough to 0 so that further calculations result in no significant change in the value of h. Calculations can then stop at this stage. Use the value of Q and h obtained in the last set of calculations as the final values.

Chapter 5 Water Hammer

5-1 General

When the flow velocity of water in the pipeline is abruptly changed, a violent change of water pressure occurs. This phenomenon is called “water hammer”. Water hammer can take place either in gravity pipeline or pumping pipeline. Examples of transient phenomena of water hammer are shown in Fig. 5-1 and 5-2.

Examples of transient phenomenon of water hammer in gravity pipeline **Fig. 5-1**

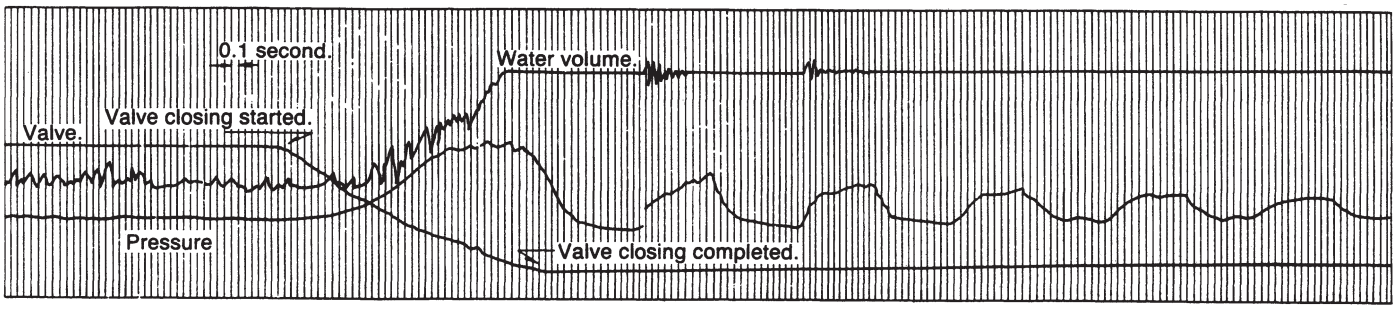

Examples of transient phenomenon of water hammer in pumping pipeline **Fig. 5-1**

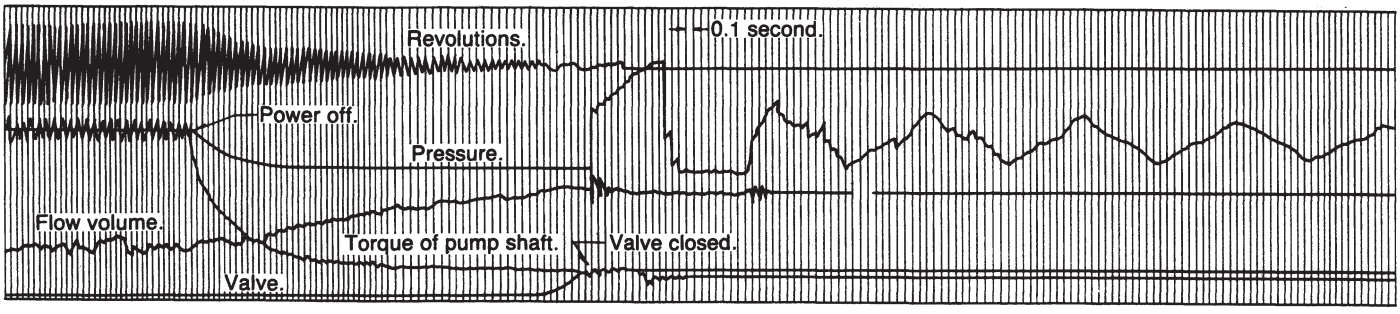

Precautions must be taken not only against pressure increase (maximum pressure) but also pressure decrease (minimum pressure).
If the minimum pressure at any point along the pipeline goes below the saturated vapor pressure of water, the pipeline will be exposed to a dangerous situation because of the possibility of water column separation. This water column separation should be avoided by using either surge tank, air chamber or other means. Pipeline shall be designed so that expected minimum negative pressure in the pipeline by water hammer is not lower than minus (–) 0.5 bar.

5-2 Simplified Calculation of Water Hammer

(1) Pressure wave velocity

$$a = \frac{1}{\sqrt{\frac{\gamma}{g}\left(\frac{1}{K}+\frac{D}{Et}\right)}}$$

Where, a : Pressure wave velocity (m/s)
γ : Unit weight of water (= 10 kN/m^3)
K : Bulk modulus of compressibility of water (= 2×10^6 kN/m^2)
E : Modulus of elasticity of pipe material
(for ductile iron pipe, E = 1.7×10^8 kN/m^2)
D : Outside diameter of pipe (m)
t : Pipe wall thickness (m)

If the diameter and wall thickness of the pipe are not uniform throughout the whole length of the pipeline, calculate $a_1, a_2, \cdots a_n$ for the lengths $L_1, L_2, \cdots L_n$ of the parts of pipeline whose diameter and wall thickness are identical. Then work out the average value for the total length of the pipeline according to the following formula.

$$a = \frac{L}{\Sigma(L_n/a_n)}$$

(2) Simplified calculation method of water hammer by rapid valve opening or closing (in case of T<2L/a)
In this case, Joukowsky formula is used.

$$H - H_0 = -\frac{a}{g}(V - V_0)$$

Where, H_0 : Water head in the constant flowing condition (m)
V_0 : Flow velocity in the constant flowing condition (m/s)
H : Water head at a given time after valve operation (m)
V : Flow velocity at a given time after valve operation (m/s)

When valve is fully closed and V = 0, $H - H_0 = aV_0/g$ is the maximum additional water head caused by water hammer.

(3) Simplified calculation method of water hammer by slow valve opening or closing (in case of T>2L/a)
The approximation formula which is quite close to Allievi formula is based on the assumption that from the time the first reflected wave returns to the valve until the valve is fully closed, the pressure remains unchanged and that the effective opening area of the valve is changed rectilinearly.

$$\frac{H}{H_0} = 1 + \frac{n}{2}\left(n \pm \sqrt{n^2+4}\right)$$

In this formula, (+) causes rise of the pressure at valve closing and (-) causes drop at valve opening.

$$n = \frac{LV_0}{TgH_0}$$

Where, L : Length of pipeline (m)
T : Time for valve closing or opening (sec)

(4) Simplified calculation method of water hammer in pumped pipeline
In this case, there is direct or iterative calculation method based on differential equations, diagrammatic calculations, etc., which involves a considerable amount of tedious work. To obtain a rough idea, simplified Parmakian diagrams in Fig. 5-3 to 5-6 are handy and convenient.

Parmakian diagram for water hammer in pumping pipelines

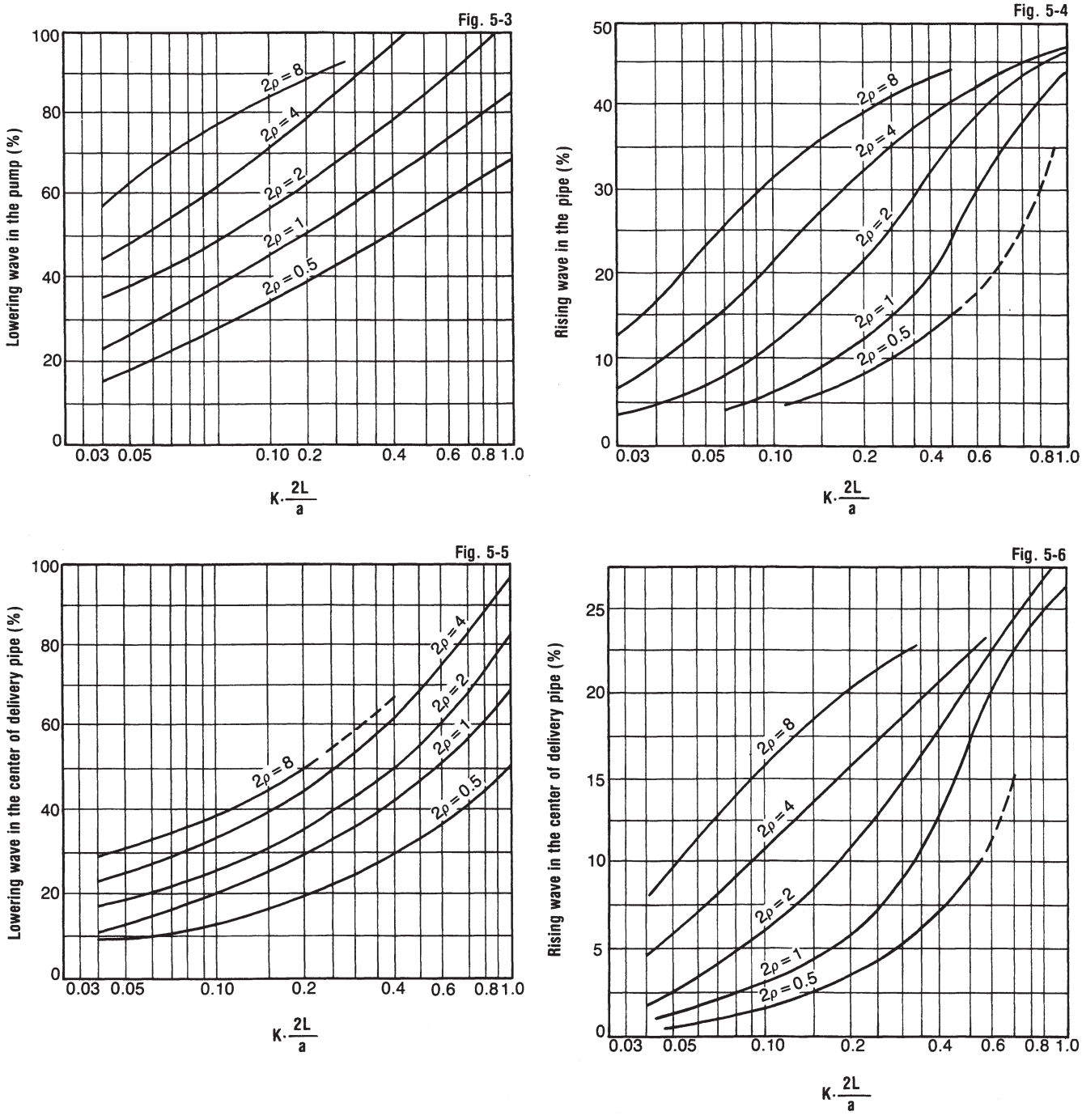

Notes to Parmakian diagrams:

Note 1.

$$K\frac{2L}{a} = 1.79\times10^{6}\frac{Q_0H_0}{GD^2\eta_0N_0^2}\frac{2L}{a}$$

Where, H_0 : Normal head of pump (m)
Q_0 : Normal flow volume of pump (m^3/s)
$GD^2/4g$: Moment of inertia of the revolving parts ($kgf\text{-}m\cdot s^2$)
N_0 : Normal revolution of pump (rpm)
L : Length of pipeline (m)
a : Velocity of pressure wave (m/s)
η_0 : Normal effective ratio of pump
2ρ : $= aV_0/gH_0$ (when material and diameter of pipe are all identical)
$= Q_0\Sigma(L_n/A_n)/gH_0\Sigma(L_n/a_n)$ (when they are different)
V_0 : Normal flow velocity (m/s)
A : Sectional area of pipe (m^2)

Note 2.

Moment of inertia of the revolving parts is mostly from GD^2 of motor and the revolving parts of pump contribute only about 10% of total. GD^2 of motors varies depending on the type of motor and the manufacturer.

5-3 Prevention of Water Hammer

The fundamental measure for water hammer prevention is to make the change of flow velocity as slow as possible during the transitional period. Almost all devices for water hammer prevention measure are designed for this purpose. Those devices can be classified into the following three groups.

(1) to slow down the change of flow velocity
(2) to prevent the pressure drop
(3) to limit the pressure rise

Regarding the actual device for water hammer prevention, a simple device may be adequate in some cases and complicated devices may be required in other cases. Regardless, very careful investigation is required to make sure if it suits a particular pipeline. Here, only basics for design are given in Table 5-1.

Water hammer prevention measure **Table 5-1**

Method	Purpose	Measure
Selection of low flow velocity	To minimize the change of flow velocity	Lower flow velocity, about 1m/s or less, is better.
Selection of larger GD^2	To slow down the change of rotating speed and minimize the fluctuation of flow velocity	Add a certain value of GD^2 to the coupling. If not enough, provide a flywheel separately.
Lead of water into pipeline	To prevent vacuum by pressure drop	- Provide surge tank. - Feed water from the suction water level through separate piping.
Lead of air into pipeline	To prevent vacuum by pressure drop	Provide air chamber or air valves.
Use of slow closing check valve	To prevent pressure rise	Close check valve slowly. Check valve will be provided with oil dash pot and closed by counter flow of water.
Forced control of main valve	To prevent pressure rise	Control the main valve by means of oil pressure, pneumatic pressure or water pressure, and DC power supply.
Omission of check valve	To prevent pressure rise	Check valve and foot valve are not provided so that reverse running of pump and motor may occur.
Use of automatic pressure regulator valve	To prevent pressure rise	This valve opens as motor stops and prevents pressure change in transitional period. After the specified time it closes gradually. The discharge flow from it does not pass through the pump.
Use of safety valve	To prevent pressure rise	This valve releases water when the pressure reached the limit value. There are balance weight type and spring-loaded type.

6-1 Earth Pressure due to Earth Cover

Case A: Prism formula

Fig. 6-1

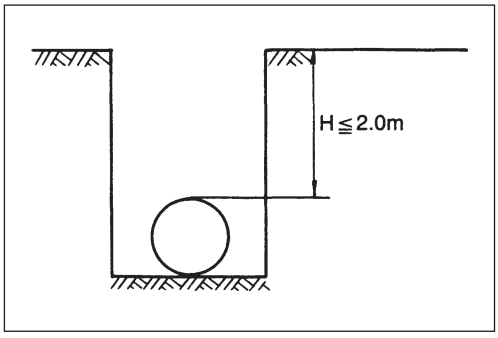

This formula is recommended where earth cover depth is 2m or less.

$$W_f = 0.001\gamma H$$

Where, W_f: Earth pressure due to earth cover (MPa)
γ : Unit weight of backfilling soil (kN/m³)
H : Depth of earth cover (m)

Case B: Marston's formula for ditch condition

Fig. 6-2

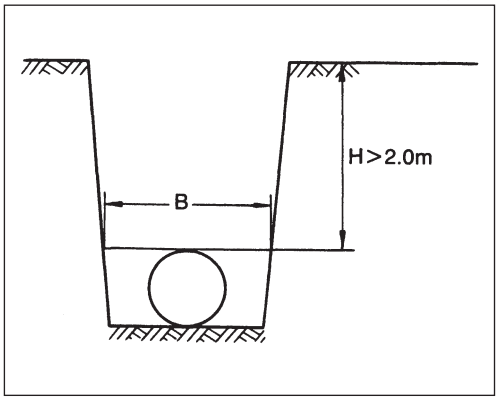

This formula is recommended where earth cover depth is more than 2m.

$$W_f = \frac{0.001\gamma}{2k\tan\phi}\left(1-e^{-2k\tan\phi H/B}\right)B$$

Where, B : Width of trench at the top of pipe (m)
ϕ : Internal friction angle of backfilling soil (deg.)
k : $k = \frac{1-\sin\phi}{1+\sin\phi}$

Case C: Marston's formula for positive-projection condition

Fig. 6-3

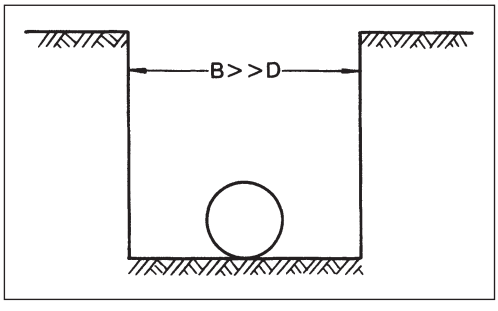

This formula is recommended where the width of trench is much greater than the pipe diameter or under positive-projection embankment condition.

$$W_f = 0.001C_c\gamma D$$

Where, C_c : Coefficient (See Fig. 6-6)
D : Diameter of pipe (m)

Fig. 6-4

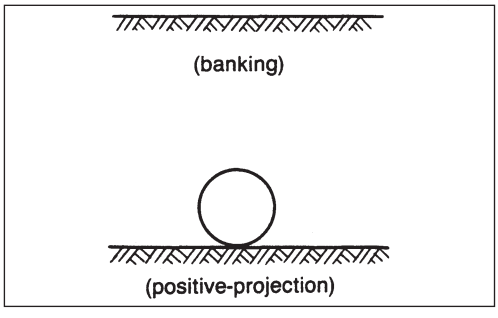

Case D: Marston's formula for negative-projection condition

Fig. 6-5

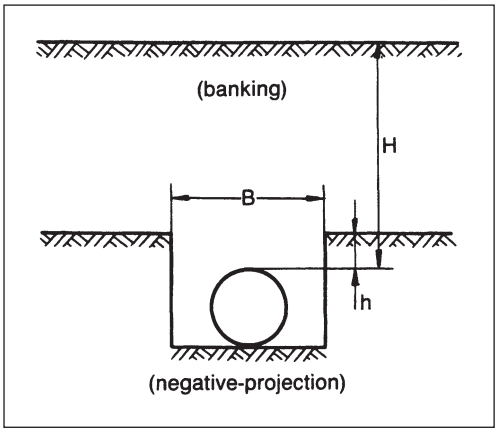

This formula is recommended under negative-projection embankment condition.

$$W_f = 0.001 C_n \gamma B$$

Where, C_n : Coefficient (See Fig. 6-7)
B : Width of trench (m)

In Fig. 6-7, p' = h/B

Coefficient C_c

Fig. 6-6

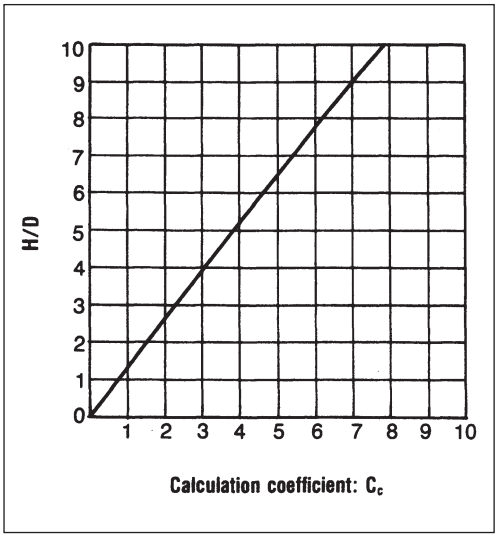

Coefficient C_n

Fig. 6-7

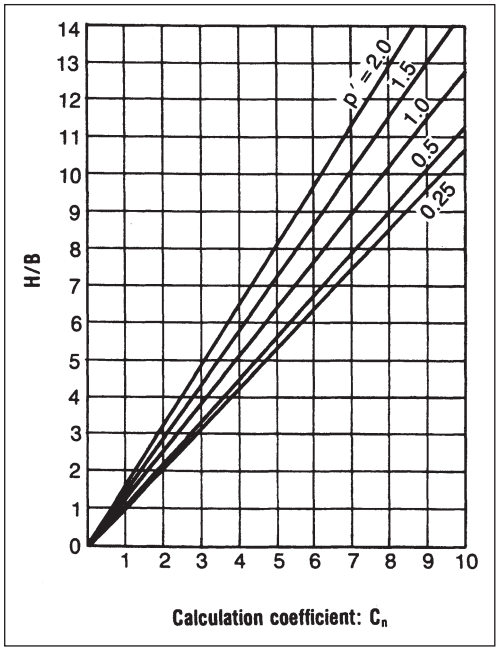

6-2 Earth Pressure due to Vehicle Load

6-2-1 Truck load

Earth pressure due to truck load is calculated by Boussinesq formula.

$$W_t = 10F\alpha P$$

Where, W_t : Earth pressure due to truck load (MPa)
F : Impact factor (= 1.5)
P : Load of one rear tire of truck (in case of 250 kN truck, P = 100 kN)
α : Coefficient (See Fig. 6-8 and 6-9)

Coefficient α for one truck Fig. 6-8

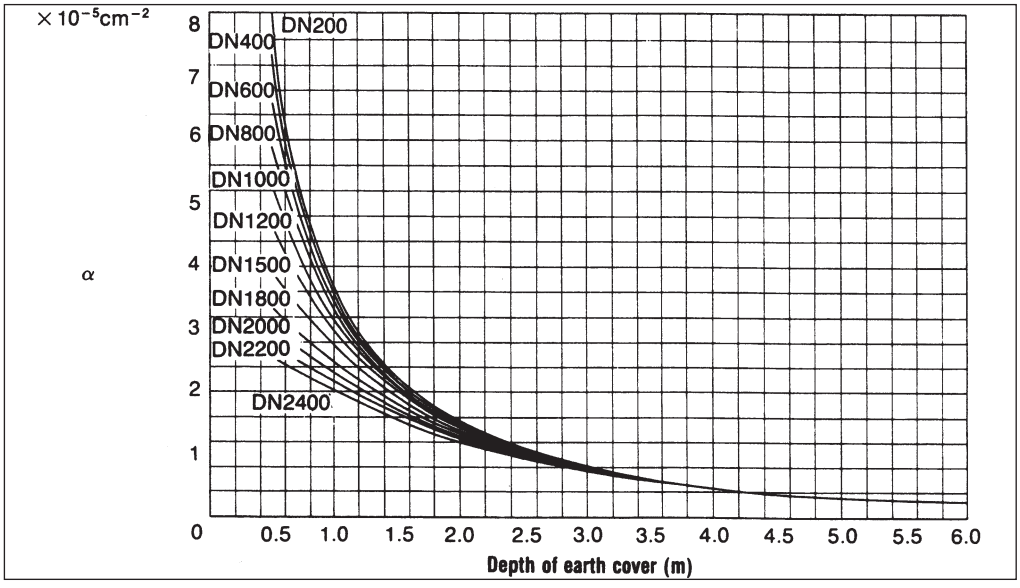

Coefficient α for two trucks Fig. 6-9

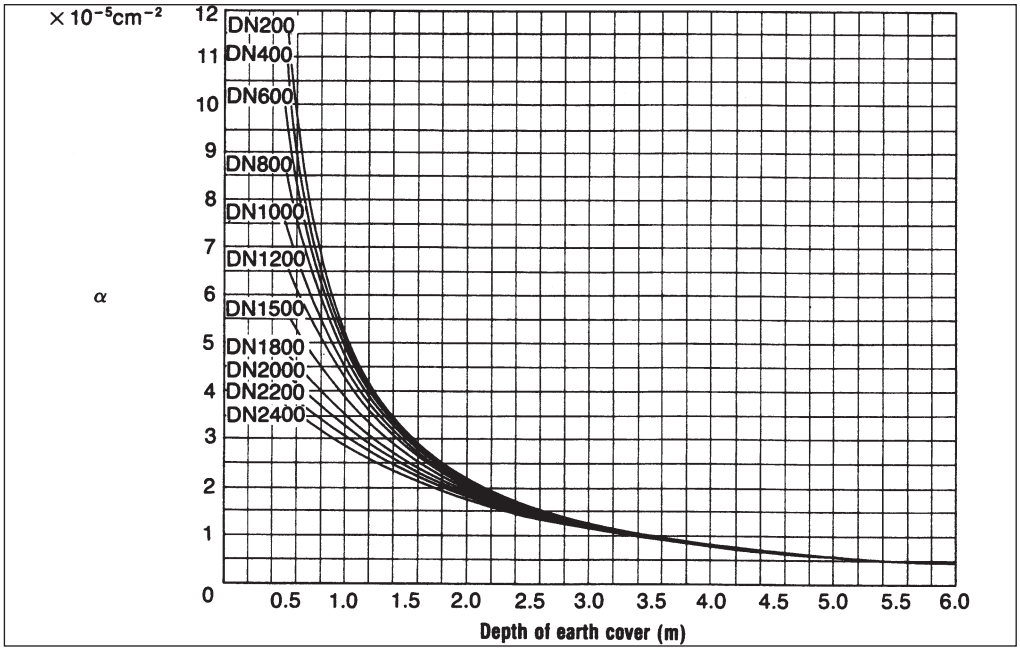

6-2-2 Caterpillar load by bulldozer

Earth pressure due to caterpillar load by bulldozer is calculated by the below formula.

Fig. 6-10

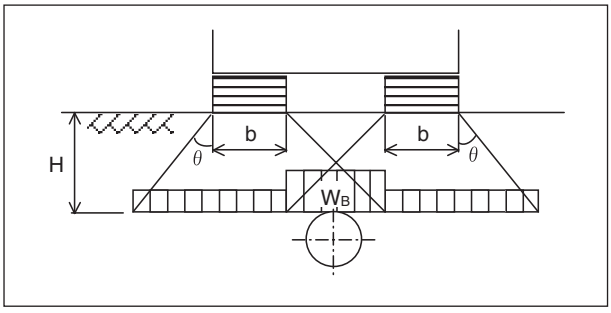

$$W_B = \frac{nq_B(1+i)}{b+2H\tan\theta}$$

Where, W_B : Earth pressure due to caterpillar load (MPa)
n : Number of caterpillars affects on the pipe (n = 1 or 2)
H : Depth of earth cover (m)
θ : Distribution angle of caterpillar load (normally $\theta = 45^\circ$)
i : Impact factor (i = 0.2 for weak ground and i = 0 for others)
b : Width of caterpillar (m)
q_B : Vertical pressure of vehicle (MPa) (See Table 6-1)

Table 6-1

Class of Bulldozer	q_B (MPa)	b (m)	Distance of caterpillars (m)
30 kN	0.033	0.30	1.19
60 kN	0.046	0.35	1.42
80 kN	0.048	0.41	1.54
110 kN	0.058	0.46	1.88
150 kN	0.060	0.51	1.88

Chapter 7 Design of Ductile Iron Pipe

7-1 General

Pipelines laid underground are subjected to many kinds of loads during in service, and these loads should be taken into account in the stress analysis of the pipe. ISO 10803 and national standards are available for the design of ductile iron pipe.
In ISO 10803, the pipe wall thickness is designed to provide adequate strength against the internal pressure and against the effects of external loads due to backfill and traffic. The pipe wall thickness required for the internal pressure (t_1) is checked by hoop stress and that for external pressure (t_2) by vertical deflection, and the nominal wall thickness is the larger of t_1 and t_2 plus the manufacturing tolerance.

7-2 Design by ISO 10803

7-2-1 Design for internal pressure

Pipe wall thickness required to resist the internal pressure can be calculated by using the following equation.

$$t_1 = \frac{p(D-t_1)S_F}{2R_m}$$

Where, t_1 : Minimum pipe wall thickness to resist the internal pressure (mm)
p : Internal pressure (MPa)
D : Pipe external diameter (mm)
R_m : Minimum tensile strength of pipe (= 420 MPa according to ISO 2531)
S_F : Design safety factor (= 2.5 for the maximum allowable operating pressure and 3 for the allowable operating pressure)

The allowable pressures of K9 and K10 pipes, derived from the above equation, is given in Table 7-1.

Allowable pressures (in bars) **Table 7-1**

DN	K9			K10		
	Allowable operating pressure	Maximum allowable operating pressure	Allowable test pressure	Allowable operating pressure	Maximum allowable operating pressure	Allowable test pressure
80 to 150	64	77	96	64	77	96
200	62	74	79	64	77	96
250	54	65	70	61	73	78
300	49	59	64	56	67	72
350	45	54	59	51	61	66
400	42	51	56	48	58	63
450	40	48	53	45	54	59
500	38	46	51	44	53	58
600	36	43	48	41	49	54
700	34	41	46	38	46	51
800	32	38	43	36	43	48
900	31	37	42	35	42	47
1000	30	36	41	34	41	46
1100	29	35	40	32	38	43
1200	28	34	39	32	38	43
1400	28	33	38	31	37	42
1500	27	32	37	30	36	41
1600	27	32	37	30	36	41
1800	26	31	36	30	36	41
2000	26	31	36	29	35	40
2200	26	31	36	29	35	40
2400	25	30	35	29	34	39
2600	25	30	35	28	34	39

7-2-2 Design for external load

Pipe wall thickness to resist the external loads shall be determined to limit the pipe diametral deflection within the allowable maximum value by using the following equation.

$$\Delta = 100 \frac{K_x q}{8S + 0.0061E'}$$

Where, Δ : Pipe diametral deflection to the external diameter D (%) (See (1))
K_x : Bedding coefficient (See Table 7-3)
q : Vertical pressure due to external loads (MPa) (See (2))
S : Pipe diametrical stiffness (= $E\,I/(D - t_2)^3$) (MPa)
D : Pipe external diameter (mm)
E : Modulus of elasticity of pipe (= 170,000 MPa)
I : Second moment of area of pipe per unit length (= $t_2^3/12$) (mm^3)
E' : Modulus of soil reaction (MPa) (See Table 7-3)
t_2 : Minimum pipe wall thickness to limit the diametral deflection caused by external loads (mm)

(1) Pipe diametral deflection: Δ
The allowable pipe diametral deflection Δ_{max} is given in Table 7-2.

Allowable diametral deflection **Table 7-2**

DN	Δ_{max} (%)					
	Pipes complying with ISO 7186		Pipes complying with ISO 2531			
			K9		K10	
	Cement lining	Flexible lining[1)]	Cement lining	Flexible lining[1)]	Cement lining	Flexible lining[1)]
80	-	-	0.85	0.85	0.85	0.85
100	1.65	1.65	1.05	1.05	1.05	1.05
150	2.30	2.30	1.55	1.55	1.40	1.40
200	2.70	2.70	1.90	1.90	1.70	1.70
250	2.95	2.95	2.20	2.20	2.00	2.00
300	3.00	3.20	2.50	2.50	2.25	2.25
350	3.10	3.50	2.70	2.70	2.45	2.45
400	3.20	3.75	2.90	2.90	2.60	2.60
450	3.30	3.95	3.05	3.05	2.75	2.75
500	3.40	4.20	3.25	3.25	2.90	2.90
600	3.60	4.55	3.55	3.55	3.20	3.20
700	3.80	4.25	3.75	3.75	3.40	3.40
800	4.00	4.50	4.00	4.00	3.55	3.55
900	4.00	4.65	4.00	4.15	3.75	3.75
1000	4.00	4.85	4.00	4.30	3.85	3.85
1100	4.00	4.45	4.00	4.45	4.00	4.00
1200	4.00	4.55	4.00	4.55	4.00	4.10
1400	4.00	4.75	4.00	4.75	4.00	4.25
1500	4.00	4.80	4.00	4.80	4.00	4.35
1600	4.00	4.90	4.00	4.90	4.00	4.40
1800	4.00	5.00	4.00	5.00	4.00	4.50
2000	4.00	5.00	4.00	5.00	4.00	4.60
2200	4.00	5.00	4.00	5.00	4.00	4.70
2400	4.00	5.00	4.00	5.00	4.00	4.75
2600	4.00	5.00	4.00	5.00	4.00	4.85

1) Flexible linings are those linings which can withstand without cracking a pipe diametral deflection of 2 times Δ_{max}.

(2) Vertical pressure due to external load: q

$$q = q_1 + q_2$$

Where, q_1 : Pressure due to earth loads (MPa)
q_2 : Pressure due to traffic loads (MPa)

·Pressure due to earth loads: q_1

$$q_1 = 0.001\gamma H$$

Where, γ : Unit weight of backfill (kN/m^3)
H : Height of earth cover (m)

·Pressure due to traffic loads: q_2

$$q_2 = 0.04\frac{\beta}{H}(1-2\times10^{-4}DN)$$

Where, β : Traffic load factor (= 1.5 for main roads, 0.75 for access roads, and 0.5 for rural area)
DN : Nominal diameter of pipe

(3) Soil-pipe interaction
The modulus of soil reaction E' of the sidefill depends upon the trench type and type of soil (See Table 7-3).

Modulus of soil reaction E'

Table 7-3

Trench type	1	2	3	4	5
Placement of embedment	Dumped	Very light compaction	Light compaction	Medium compaction	High compaction
Standard Proctor density of sidefill	1)	>75	>80	>85	>90
Bedding reaction angle (2α)	30°	45°	60°	90°	150°
Kx	0.108	0.105	0.102	0.096	0.085
E' (MPa)					
Soil Group A	4	4	5	7	10
Soil Group B	2.5	2.5	3.5	5	7
Soil Group C	1	1.5	2	3	5
Soil Group D	0.5	1	1.5	2.5	3.5
Soil Group E	2)	2)	2)	2)	2)
Soil Group F	2)	2)	2)	2)	2)

1) Depending on the type of soil and its moisture content, a standard Proctor density of 70 % and 80 % will normally be achieved by simply dumping the soil in the trench.
2) Use an E' value of 0 unless it can be ensured that a higher value will be achieved consistently.

Soil classification

Table 7-4

Soil group	Description
A	Angular graded stone (6 to 40 mm), also including a number of fill materials that have regional significance such as crushed stone, crushed gravel, pea gravel and crushed shells.
B	Coarse-grained soils with little or no fines. No particles larger than 40mm.
C	Coarse-grained soils with fines and fine-grained soils with medium to no plasticity, with greater than 25% coarse particles, liquid limit (LL) less than 50 %.
D	Fine-grained soils with medium to no plasticity, with less than 25% coarse particles, liquid limit (LL) less than 50 %.
E	Fine-grained soils with medium to high plasticity, liquid limit (LL) greater than 50 %.
F	Organic soils

7-2-3 Determination of pipe wall thickness

The minimum pipe wall thickness t is the larger of t_1 and t_2.
The required nominal pipe wall thickness is determined by adding the tolerance specified in ISO 2531 (i.e. 1.3 + 0.001DN mm) to the minimum pipe wall thickness t, the appropriate standard pipe wall thickness class can thus be selected.

7-2-4 Allowable earth cover depth

An example of the allowable depth of earth cover extracted from ISO 10803 is shown in Table 7-5.
Note, for other conditions, see ISO 10803.

Allowable depth of earth cover for K9 pipes under main road (β = 1.5) **Table 7-5**

DN	Allowable depth of earth cover (m)					
	Type 3 trench			Type 5 trench		
	Soil group A	Soil group C	Soil group E	Soil group A	Soil group C	Soil group E
80	40.4	39.5	38.8	>50	>50	>50
100	40.4	39.5	38.8	>50	48.5	46.5
150	20.1	18.7	17.7	26.9	24.1	21.3
200	14.0	12.3	11.1	20.3	16.9	13.4
250	12.1	10.1	8.7	18.7	14.7	10.6
300	10.9	8.5	6.9	17.7	13.1	8.5
350	10.2	7.7	5.9	17.2	12.3	7.3
400	9.6	6.9	5.0	16.9	11.7	6.2
450	9.4	6.5	4.5	16.9	11.4	5.6
500	9.2	6.1	3.9	17.1	11.2	5.0
600	9.1	5.7	3.2*	17.5	11.0	4.3
700	8.9	5.4	2.7*	17.7	10.8	3.6
800	9.1	5.3	NR	18.3	11.0	3.3
900	8.7	4.9	NR	17.8	10.6	2.7*
1000	8.5	4.6	NR	17.5	10.3	NR
1100	8.3	4.4	NR	17.3	10.0	NR
1200	8.1	4.2	NR	17.1	9.8	NR
1400	7.9	4.0	NR	16.8	9.5	NR
1500	7.8	3.9	NR	16.7	9.4	NR
1600	7.7	3.8	NR	16.6	9.3	NR
1800	7.6	3.7	NR	16.5	9..2	NR
2000	7.5	3.6	NR	16.3	9.1	NR
2200	7.4	3.6	NR	16.3	9.0	NR
2400	7.4	3.6	NR	16.2	8.9	NR
2600	7.3	3.5	NR	16.2	8.9	NR

* Minimum allowable depth of cover is 1.0m.
NR: Not recommended

7-3 Kubota's Design Method

Kubota Corporation has different design method which is based on Japan Water Works Association Standard. In this method, tensile stress due to the internal pressure and bending stress due to the external loads are checked and the sum of them shall be less than the minimum tensile strength of ductile iron pipe. Furthermore, vertical deflection of pipe is also checked.

7-3-1 Design for internal pressure

Tensile stress due to internal pressure can be calculated by using the equation of hoop stress.

$$\sigma_t = \frac{PDN}{2t}$$

Where, σ_t : Tensile stress due to internal pressure (MPa)
P : Internal pressure (MPa)
DN : Nominal pipe diameter (mm)
t : Net pipe wall thickness (mm)
In accordance with ISO 2531, t = T – (1.3 + 0.001DN)
T : Nominal pipe wall thickness (mm)

7-3-2 Design for external pressure

(1) Bending stress due to earth cover σ_{bf}

It has been confirmed by numerous test results simulating actual conditions which have been conducted by us since 1959, that ductile iron pipe buried underground experiences earth pressure from backfilled earth cover under conditions illustrated in Fig. 7-1.

Earth pressure distribution on ductile iron pipe due to earth cover **Fig. 7-1**

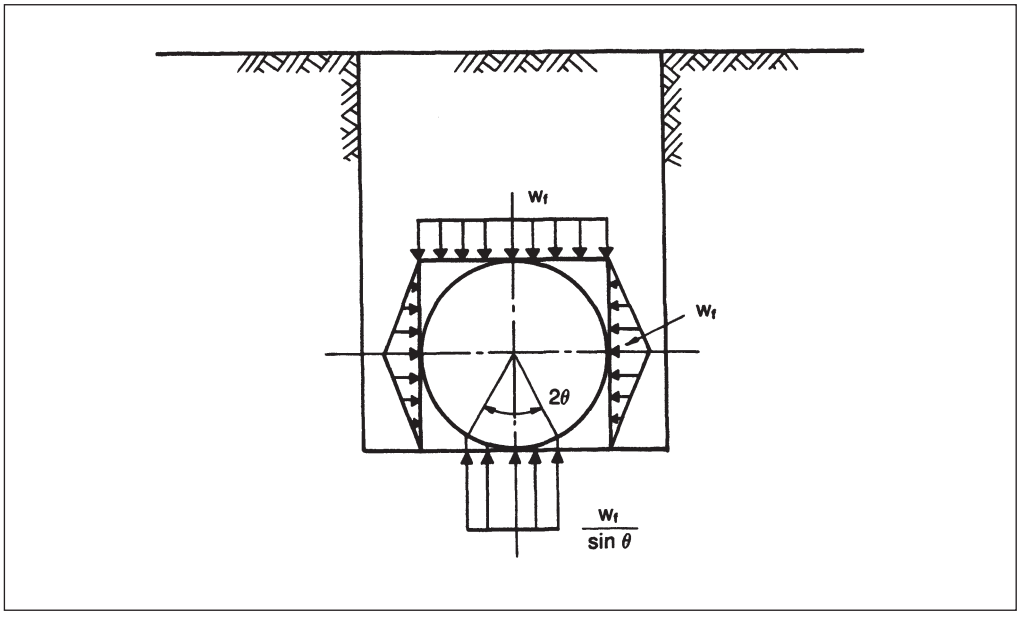

w_f : Earth pressure due to earth cover (MPa)
2θ : Pipe supporting angle (varies depending on bedding conditions, soil conditions, backfilling conditions, etc.) (degree)

Assuming earth pressure distribution as Fig. 7-1, bending moment on pipe wall Mt can be calculated by the following equation.

$$M_f = k_f w_f \frac{DN^2}{4}$$

Where, k_f : Coefficient of moment due to earth cover

Coefficient k_f

Table 7-6

Pipe supporting angle (2θ)	60°	90°	120°
At pipe crown	0.132	0.120	0.108
At pipe bottom	0.223	0.160	0.122

For design purpose, the following pipe supporting angles can be assumed depending on backfilling conditions.

Pipe supporting angle

Table 7-7

Backfilling condition	Not-compacted	Slightly compacted	Well compacted
Pipe supporting angle (2θ)	60°	90°	120°

For normal soil condition only. Pipes laid on a hard trench bottom will be supported with a smaller angle. On the other hand, pipes laid on a soft trench bottom will be supported with a larger angle.

Accordingly, bending stress on the pipe wall due to earth cover can be calculated by the following equation.

$$\sigma_{bf} = \frac{M_f}{Z} = \frac{6k_f w_f}{4t^2} DN^2$$

Where, Z : Modulus of section per unit length (= $t^2/6$) (m^2)

The calculation of the stress should be made at both the crown and the bottom of pipe.

7-3-3 Bending stress due to truck load σ_{bt}

Earth pressure distribution on ductile iron pipe due to truck load can be assumed as shown in Fig. 7-2.

Earth pressure distribution on ductile iron pipe due to truck load Fig. 7-2

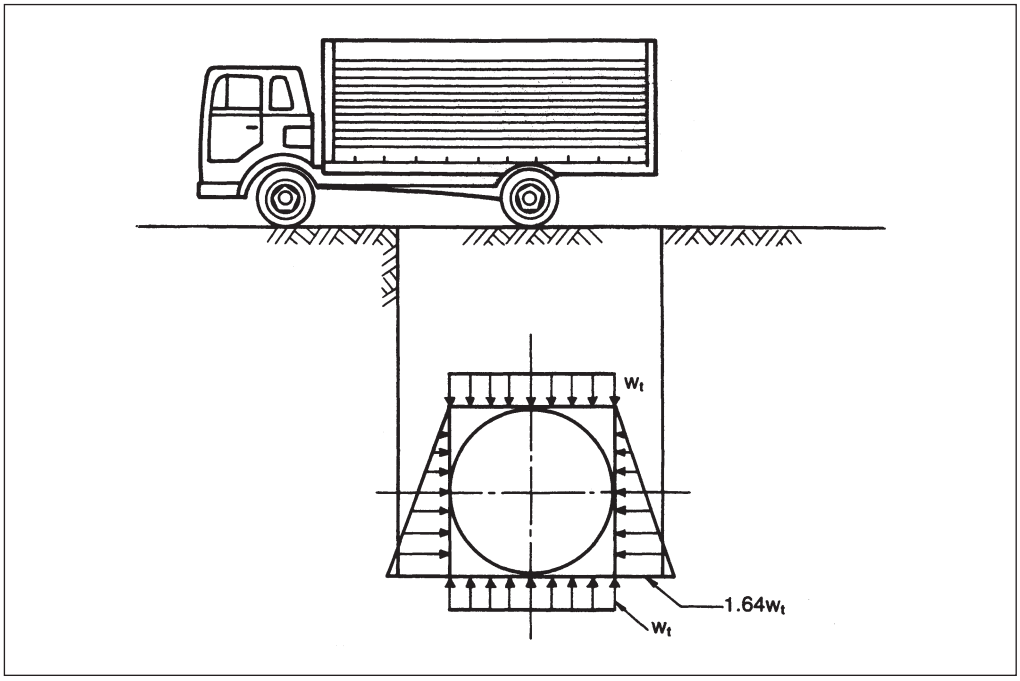

w_t : Earth pressure due to truck load (MPa)

Bending moment and bending stress on the pipe wall due to truck load M_t can be calculated by the following equations.

$$M_t = k_t w_t \frac{DN^2}{4}$$

Where, k_t : Coefficient of moment due to truck load
k_t = 0.076 at pipe crown and 0.011 at pipe bottom

$$\sigma_{bt} = \frac{M_t}{Z} = \frac{6k_t w_t}{4t^2} DN^2$$

7-3-4 Total stress

Bending stress on the pipe wall can be converted into tensile stress by multiplying 0.7. Then, total stress on the pipe wall which will experience internal pressure and external loads simultaneously can be calculated as below

$$\sigma = \sigma_t + 0.7(\sigma_{bf} + \sigma_{bt}) = \frac{PDN}{2t} + \frac{1.05(k_f w_f + k_t w_t)}{t^2} DN^2$$

The safety factor can be obtained from the following equation.

$$S_f = \frac{\sigma_D}{\sigma}$$

Where, σ_D: Minimum tensile strength of pipe (= 420 MPa according to ISO 2531)

The safety factor S_f should be not less than 2.0.

7-4 Example of Stress Analysis by Kubota Method

(1) Condition

DN600 Class K-9 ductile iron pipe (wall thickness; nominal 9.9mm, minimum 8.0mm) laid with 2m earth cover and subjected to internal pressure of 1.0 MPa and two 250kN truck loads

(2) Calculation:

1) Earth pressure due to earth cover: w_f

$$w_f = 0.001\gamma H = 0.001 \times 18 \times 2 = 0.036\text{MPa}$$

2) Earth pressure due to truck load: w_t

$$w_t = 10F\alpha P = 10 \times 1.5 \times 2.17 \times 10^{-5} \times 100 = 0.033\text{MPa}$$

3) Total stress in the pipe wall: σ

$$\sigma = \frac{PDN}{2t} + \frac{1.05(k_f w_f + k_t w_t)}{t^2} DN^2 = \frac{1 \times 600}{2 \times 8} + \frac{1.05 \times (0.223 \times 0.036 + 0.011 \times 0.033)}{8^2} \times 600^2$$

$$= 37.5 + 49.6 = 87.1\text{MPa}$$

4) Safety factor: S_f

$$S_f = \frac{\sigma_D}{\sigma} = \frac{420}{87.1} = 4.8 > 2.0$$

7-5 Diametral Deflection

7-5-1 Diametral deflection due to earth load: δ_f

$$\delta_f = k\frac{w_f DN^4}{16EI}$$

Where, k : Coefficient of deformation

Coefficient k

Table 7-8

Pipe supporting angle (2θ)	60°	90°	120°
k	0.100	0.084	0.070

7-5-2 Deformation due to truck load: δ_t

$$\delta_t = 0.03\frac{w_t DN^4}{16EI}$$

7-5-3 Total deformations: δ

$$\delta = \delta_f + \delta_t$$

The total deformation δ should be not more than 3% of the nominal diameter of pipe.

Chapter 8 Thrust Anchoring

8-1 General

Thrust forces in water mains are created when the pipeline changes directions (at bends and tees), stops (at pipe ends), or changes in size (at reducers).
To keep the pipeline intact, while there are several methods of restraint available, the most popular of which are the use of thrust blocks and restrained joints.

8-2 Thrust Force by Internal Pressure

1) At bend

Fig. 8-1

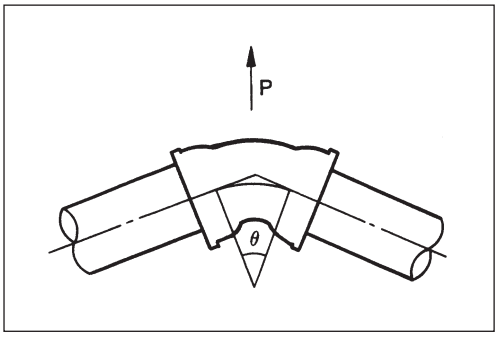

$$P = 2pA \sin\frac{\theta}{2}$$

Where, P: Thrust force
p: Internal pressure
A: Sectional area of pipe
θ : Angle of bend

2) At tee

Fig. 8-2

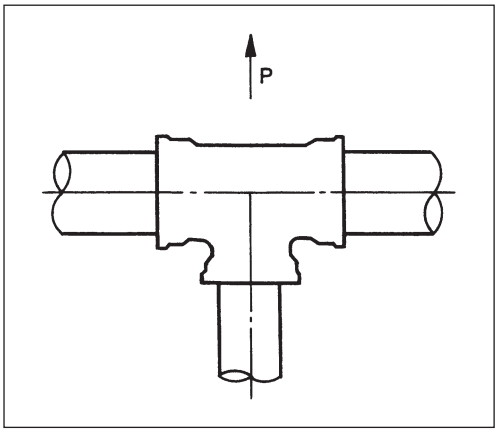

$$P = pa$$

Where, a: Sectional area of branched pipe

3) At reducer

Fig. 8-3

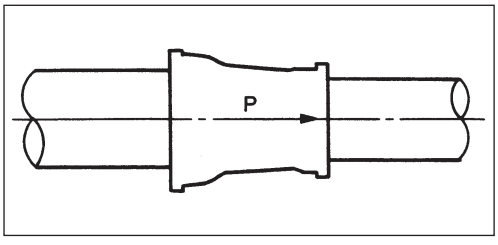

$$P = p(A-a)$$

Where, A - a: Changed sectional area

4) At pipeline end

Fig. 8-4

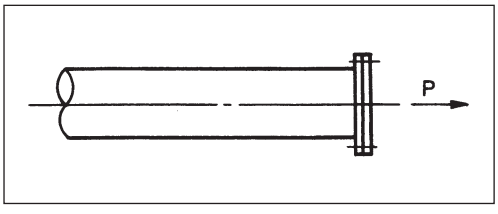

$$P = pA$$

Thrust force at 0.1 MPa pressure, in kN

Table 8-1

DN	90°bend	45°bend	22-1/2°bend	11-1/4°bend	Pipe end
80	1.067	0.577	0.294	0.148	0.754
100	1.547	0.837	0.427	0.214	1.094
150	3.210	1.737	0.886	0.445	2.270
200	5.474	2.963	1.510	0.759	3.871
250	8.339	4.513	2.301	1.156	5.896
300	11.804	6.388	3.257	1.636	8.347
350	15.870	8.589	4.379	2.200	11.222
400	20.442	11.063	5.640	2.834	14.455
450	25.591	13.850	7.061	3.547	18.096
500	31.436	17.013	8.673	4.358	22.229
600	44.787	24.239	12.357	6.208	31.669
700	60.495	32.740	16.690	8.386	42.776
800	78.746	42.617	21.726	10.916	55.682
900	99.190	53.681	27.366	13.749	70.138
1000	121.991	66.021	33.657	16.910	86.261
1100	147.404	79.775	40.669	20.433	104.231
1200	174.941	94.678	48.266	24.250	123.702
1400	237.410	128.486	65.501	32.909	167.874
1500	272.040	147.227	75.056	37.709	192.362
1600	309.027	167.244	85.260	42.837	218.515
1800	390.488	211.330	107.735	54.128	276.117
2000	481.467	260.568	132.836	66.740	340.448
2100	520.139	281.497	143.506	72.100	367.794
2200	577.397	312.485	159.303	80.037	408.281
2400	671.071	363.181	185.148	93.022	474.519
2600	800.147	433.037	220.760	110.914	565.790

Note: To determine the thrust force at the pressure other than 0.1MPa, multiply it by the thrust force in the table.
For example, the thrust force on DN600 45 degree bend at 0.5 MPa is;
24.239×5 = 121.195 kN

8-3 Anchoring by Concrete Blocks

Concrete block should be designed with sufficient resistance to withstand the thrust force under all conditions, taking into account laying and ground conditions, size and weight of the block, weight of cover soil on the block, passive soil pressure at the backside of the block and friction force at the bottom of the block.
For soft ground, the soil surrounding the block should be replaced with sand or any other appropriate material which will provide sufficient passive soil reaction.
The bearing capacity of the ground should also be checked carefully. If the bearing capacity is not enough, either the base area of the block should be enlarged or piles to support the block should be employed.
There are several types of concrete block. Some blocks cover the whole bend or tee and others do not.

8-4 Design of Concrete Block (Fittings encased)

This type of block includes whole body and joints of fittings so that the forming work for casting concrete is easy, but it is impossible to access the joints of fittings. It is essential to check and ensure the reliability of the assembled joint.

8-4-1 Design of concrete block for horizontal bend

Fig. 8-5

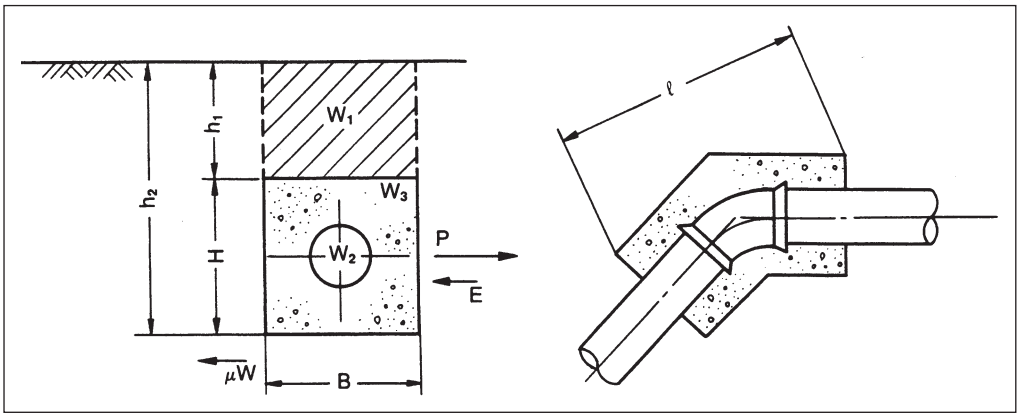

Where, P : Thrust force
W : Total weight at the block bottom (= $W_1 + W_2 + W_3$)
W_1 : Weight of soil on the block
W_2 : Weight of water and pipe in the block
W_3 : Weight of block
μW : Friction force
μ : Friction coefficient between concrete block and soil
E : Passive earth pressure at the backside of the block

$$E = \frac{1}{2} C_e \gamma (h_2^2 - h_1^2) \ell$$

C_e : Coefficient of passive earth pressure

$$C_e = \tan^2(45^\circ + \frac{\phi}{2})$$

ϕ : Internal friction angle of soil
γ : Unit weight of soil
ℓ : Projection length of the block

For the horizontal bend, the concrete block should satisfy:

$$P < \mu W + E$$

Note: When concrete block is constructed under the water table, buoyancy should be taken into consideration for the design.

8-4-2 Example of design

(1) Design conditions

Bend: DN600×45°

Pipe outside diameter; D = 635 mm (pipe wall thickness T = 9.9 mm)

Maximum internal pressure; p = 1.0 MPa (=1000 kN/m^2)

Depth of earth cover; h_1 = 1.2 m

Unit weight of soil; γ_s = 16 kN/m^3

Unit weight of concrete; γ_c = 23 kN/m^3

Internal friction angle of soil; ϕ = 30°

Friction coefficient; μ = 0.5

(2) Thrust force: P

$P = 2pA\sin(\theta/2) = 2\times1000\times\pi/4\times0.635^2\times\sin(45/2)^\circ = 242.39$ kN

(3) Design of block

Fig. 8-6

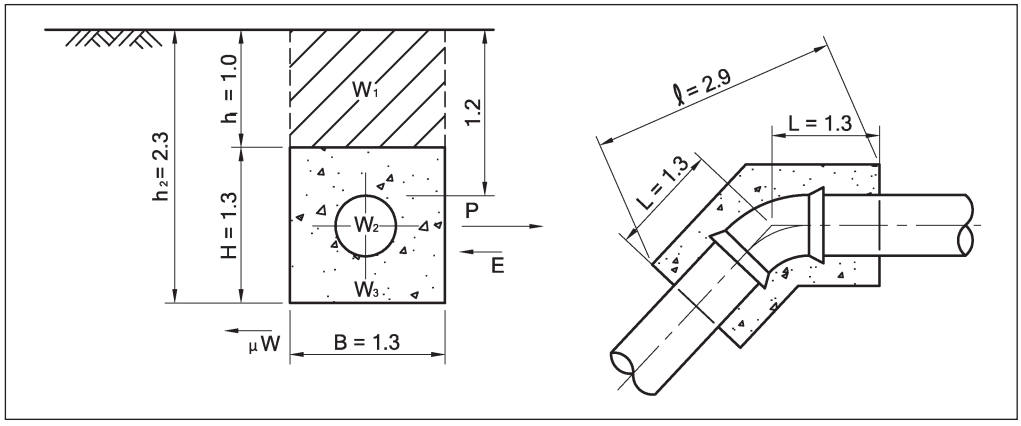

1) Weight of soil on the block: W_1

$W_1 = \gamma_s h_1 2L B = 16\times1.0\times2\times1.3\times1.3 = 54.08$ kN

2) Weight of water and pipe in the block: W_2

$W_2 = \gamma_w A2L + \gamma_d \pi(D-T)T2L$

$= 10\times\pi/4\times0.6^2\times2\times1.3 + 70.5\times\pi\times(0.635 - 0.0099)\times0.0099\times2\times1.3$

$= 10.91$ kN

3) Weight of block: W_3

$W_3 = \gamma_c[BH - (\pi/4)D^2]2L = 23\times[1.3\times1.3 - \pi/4\times0.635^2]\times2\times1.3 = 82.12$ kN

4) Total weight: W

$W = W_1 + W_2 + W_3 = 54.08 + 10.91 + 82.12 = 147.11$ kN

5) Friction force: F

$F = \mu W = 0.5\times147.11 = 73.56$ kN

6) Passive earth pressure at the backside of the block: E

$E = 1/2\, C_e \gamma_s (h_2^2 - h_1^2)\ell = 1/2\times\tan^2(45+30/2)^\circ\times16\times(2.3^2 - 1.0^2)\times2.9$

$= 298.58$ kN

7) Total resistance force: R

$R = F + E = 73.56 + 298.58 = 372.14$ kN

8) Safety factor: S_f

$S_f = R/P = 372.14/242.39 = 1.54$

The calculated safety factor is larger than 1.5, therefore this block will be satisfactory.

9) Required bearing capacity of the ground: S_b

$S_b = W/2LB = 147.11/(2\times1.3\times1.3) = 43.5$ kN/m^2

When the bearing capacity of the ground is larger than the calculated figures, the block will be satisfactory; but if not, the bottom of the block should be enlarged.

8-4-3 Design of concrete block for upward vertical bend

Fig. 8-7

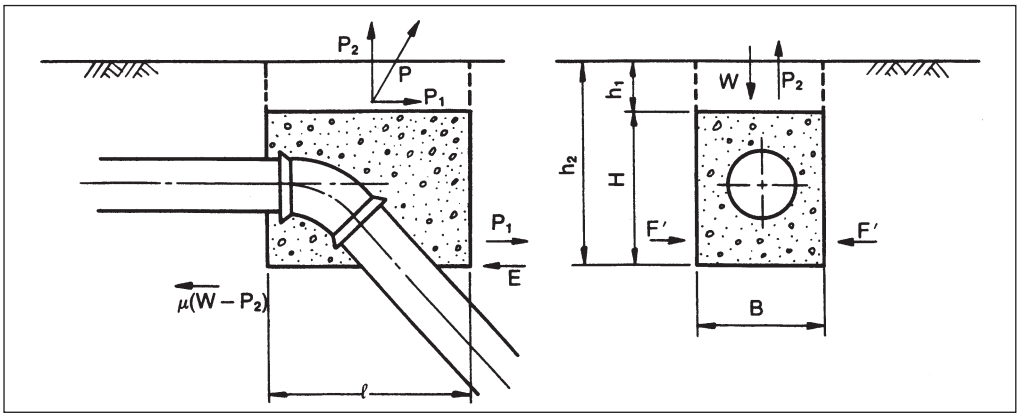

Where, P : Thrust force
P_1 : Horizontal component of the thrust force
P_2 : Vertical component of the thrust force
$\mu(W - P_2)$: Friction force
E : Passive earth pressure at the backside of the block
F : Active earth pressure at the both sides of the block

Concrete block shall be designed to satisfy the following conditions.

・Against the horizontal component of the thrust force

$$P_1 = P \sin\frac{\theta}{2} < \mu(W-P_2)+E$$

・Against the vertical component of the thrust force

$$P_2 = P \cos\frac{\theta}{2} < W+F$$

$$F = 2F' = \frac{1}{2} C_e'\gamma_s(h_2^2-h_1^2)2(B+\ell)\mu$$

Where, B : Width of the block
ℓ : Length of the block
C_e' : Coefficient of active earth pressure

$$C_e' = \tan^2(45^\circ-\phi/2)$$

Note: When concrete block is constructed under the water table, buoyancy should be taken into consideration for the design.

8-4-4 Design of concrete block for downward vertical bend

Fig. 8-8

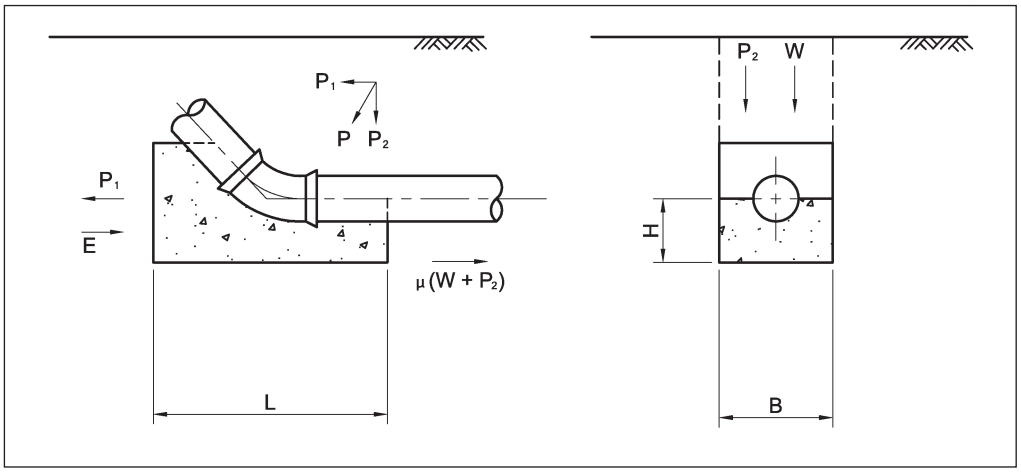

Concrete block shall be designed to satisfy the following conditions.

・Against the horizontal component of the thrust force

$$P_1 = P \sin\frac{\theta}{2} < \mu(W+P_2)+E$$

・Against the vertical component of the thrust force

$$P_2 = P \cos\frac{\theta}{2}$$

$$\sigma = \frac{W+P_2}{BL} < \sigma_a$$

Where, σ : Required bearing capacity of the ground
σ_a : Allowable bearing capacity of the ground

When the allowable bearing capacity of the ground is not sufficient, a number of piles or other countermeasure should be required.

Note: When concrete block is constructed under the water table, buoyancy should be taken into consideration for the design.

8-5 Design of Concrete Block (Joints exposed)

The concrete block, in which whole bend or tee is not embedded and its joints are exposed, allows accessing the joints during and after the field hydrostatic pressure test.
An example of the design is presented in "Manual of Water Supply Practices – Ductile-Iron Pipe and Fittings" by American Water Works Association (AWWA M 41). In this manual, the design procedure of concrete block on horizontal bend is given as below.

Fig. 8-9

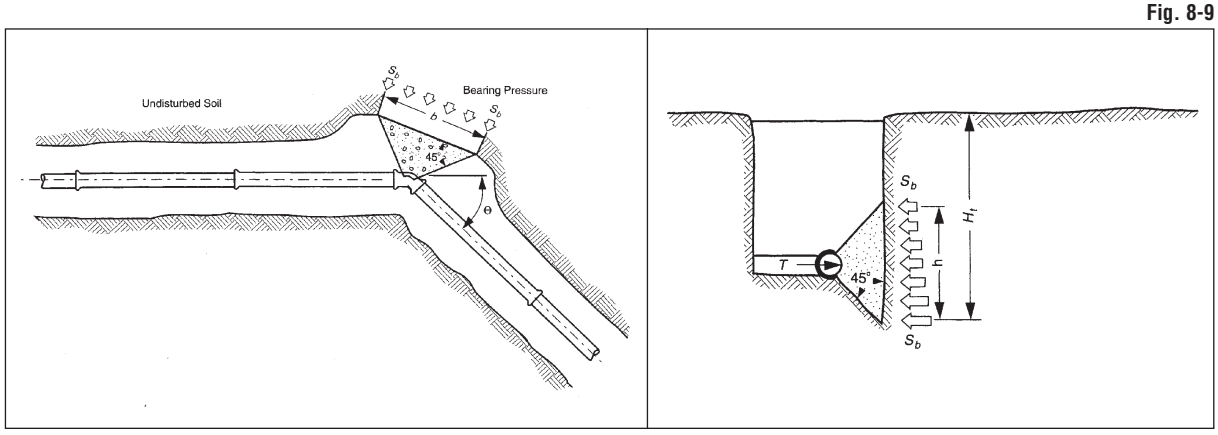

Resistance is provided by transferring the thrust force to the soil through the larger bearing area of the block such that the resultant pressure against soil does not exceed the bearing strength of the soil. Design of thrust blocks consists of determining the appropriate bearing area of the block for a particular set of conditions. The followings are general criteria for bearing block design.

- Bearing surface should, where possible, be placed against undisturbed soil. Where it is not possible, the fill between the bearing surface and undisturbed soil must be compacted to at least 90 percent Standard Proctor density.
- Block height *h* should be equal to or less than one-half the total depth to the bottom of the block H_T, but not less than the pipe outside diameter *D*.
- Block height *h*, should be chosen such that the calculated block width *b* varies between one and two times the height.

The required block bearing area A_b is:

$$A_b = hb = S_f P / S_b$$

Where, P : Thrust force
S_f : Safety factor (usually 1.5)
S_b : Horizontal bearing strength of soil

Then, for horizontal bend,

$$b = \frac{2 S_f p A \sin(\theta/2)}{h S_b}$$

8-6 Reference Tables

Friction coefficient between pipe or concrete and soil Table 8-2

Type of soil	Friction coefficient
Gravel	0.6
Clay	0.2 – 0.5
Dry sand	0.5
Wet sand	0.33

Unit weight and internal friction angle of soil Table 8-3

Type of soil	Conditions	Unit weight (kN/m^3)	Internal friction angle (degree)
Normal soil	Dry	14	35 – 40
	Wet	16	45
	Saturated	18	25 – 30
Sand	Dry	16	30 – 35
	Wet	18	40
	Saturated	20	25
Sand mixed with clay	Dry	15	40 – 45
	Wet	19	20 – 25
Clay	Dry	16	40 – 45
	Wet	20	20 – 25
Gravel	Dry	18	35 – 40
	Wet	19	27 – 40
Silt	—	17	10 – 20

Allowable bearing capacity of the ground Table 8-4

Type of soil	Allowable bearing capacity (kN/m^2)
Clay	50 – 200
Soil mixed with sand	300 – 400
Wet sand	10 – 300
Dry sand	300 – 500

8-7 Thrust Anchoring by Restrained Joints

Restrained joints can be used to protect bends, tees or tapers from the thrust forces caused by the internal pressure of the pipeline. Restrained joints are useful where space is limited for concrete blocks, where soil behind the bends or tees will not provide adequate support, or when there is insufficient time to set and cure the concrete blocks.

8-7-1 Restrained coupling (Kubolock-T)

Kubolock-T is a restrained coupling, which is attached on the push-on T-type joint and converts the flexible push-on joint into flexible restrained joint.

Restrained coupling Kubolock-T Fig. 8-10

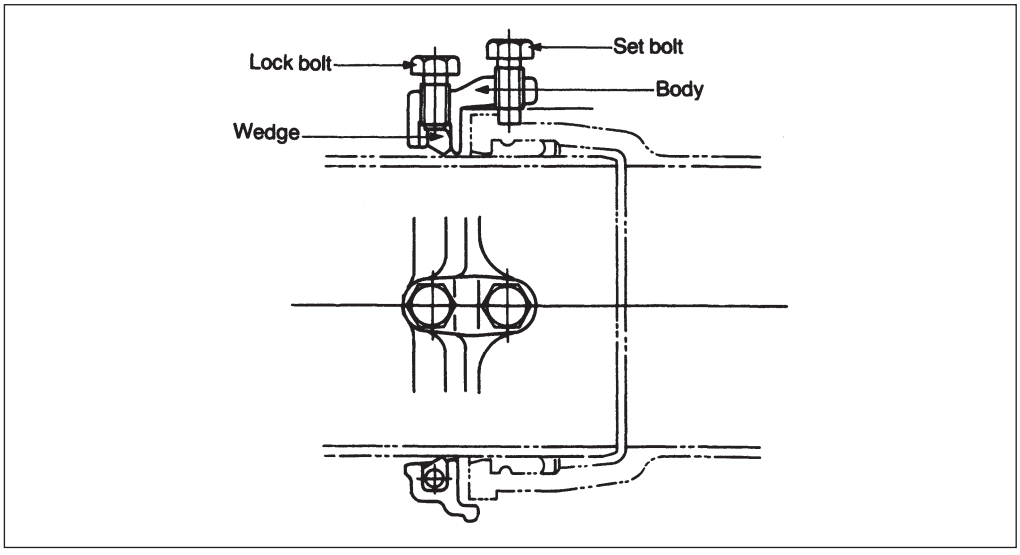

Kubolock-T is applicable to pipes and fittings with our T-type push-on joint ranging from DN80 to DN600.
Note. Kubolock-T of DN 700 to DN1200 may be available upon request.

The allowable hydraulic pressure and deflection angle of Kubolock-T are shown in the below table.

Table 8-5

DN	Allowable maximum pressure (MPa)	Allowable deflection angle
80 to 200	2.5	2°30’
250, 300	2.5	2°00’
350	2.0	2°00’
400	2.0	1°45’
450, 500	2.0	1°30’
600	1.5	1°30’

8-7-2 Retainer gland (Kubolock-K)

Kubolock-K is a retainer gland which converts the flexible mechanical K-type joint into flexible restrained joint.

Retainer gland Kubolock-K

Fig. 8-11

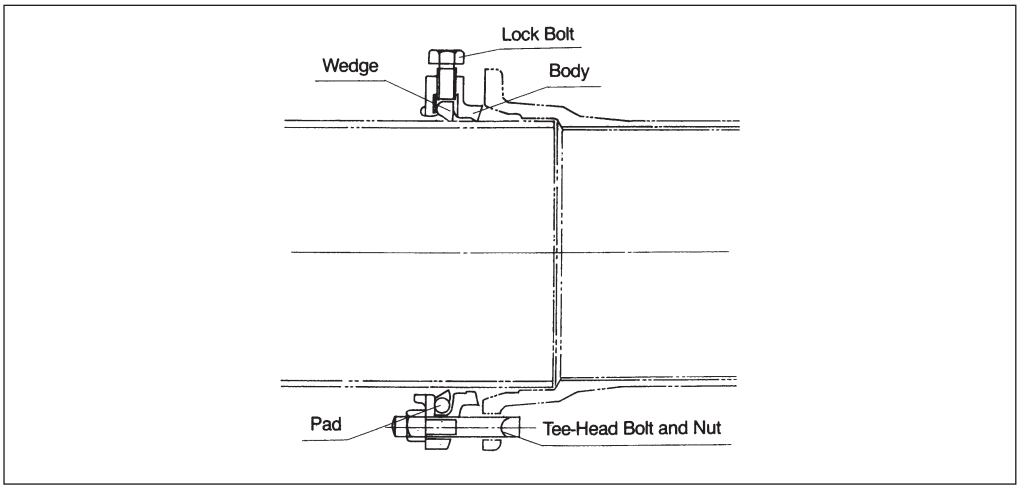

Kubolock-K is applicable to pipes and fittings with our K-type mechanical joint ranging from DN80 to DN600.
The allowable hydraulic pressure and deflection angle of Kubolock-K are shown in the below table.

Table 8-6

DN	Allowable maximum pressure (MPa)	Allowable deflection angle
80 to 300	2.5	2°30’
350	2.5	2°25’
400	2.5	2°05’
450	2.3	1°55’
500	2.0	1°40’
600	1.7	1°25’

8-7-3 TF-type restrained joint

TF-type joint is rigid type restrained push-on joint ranging from DN400 to DN1600.

TF-type restrained joint Fig. 8-12

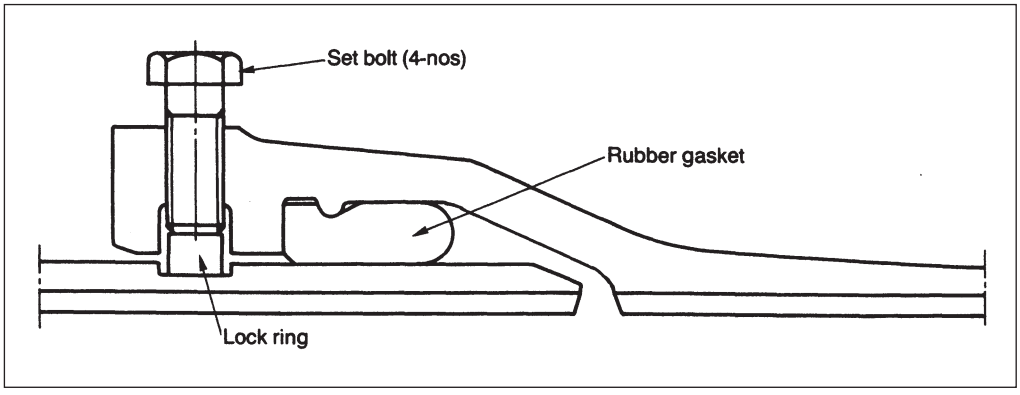

Lock ring is placed in the grooves provided on the socket and spigot. TF-type joint is of moment-bearing type and the deflection angle is zero for the design purpose. The sealing portion of TF-type joint is the same as that of push-on T-type joint.
The allowable bending moment and hydraulic pressure of TF-type joint are shown in the below table.

Table 8-7

DN	Allowable bending moment (kN-m)	Allowable maximum pressure (MPa)
400	100	4.3
450	110	4.3
500	120	4.3
600	140	3.0
700	170	3.0
800	190	3.0
900	220	2.0
1000	240	2.0
1100	260	2.0
1200	290	2.0
1400	340	2.0
1500	360	2.0
1600	380	2.0

8-8 Restrained Length

8-8-1 Required restrained length for Kubolock (-T and -K)

The required restrained length of the pipes at each side of horizontal bend is so decided that the friction force and passive earth pressure on the restrained pipes are larger than the thrust force caused by the internal pressure. As these restrained joints are non-moment-bearing type so that the passive earth pressure is expected on only the first pipe adjacent to the each side of bend.

(1) Forces at horizontal bend

The thrust force and resistance forces at horizontal bend are illustrated below.

Fig. 8-13

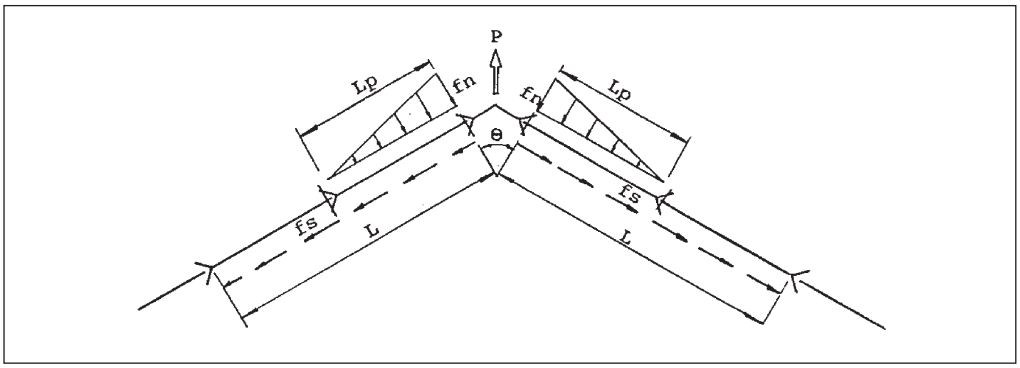

Where, P : Thrust force by internal pressure
f_s : Friction force
f_n : Passive earth pressure
L : Restrained length
L_p: Pipe length

(2) Earth pressure by backfill

Calculation method of earth pressure varies depending on the earth cover depth. In case that earth cover depth to the center of the pipe is 2m or less, prism formula is used. In case that over 2m, earth pressure is the larger of that calculated by prism formula at the earth cover depth to the center of pipe is 2m or that by Marston's formula.

- Prism formula

$$W_f = \gamma H_c$$

Where, W_f : Earth pressure by backfill (kN/m^2)
γ : Unit weight of backfill (kN/m^3)
H_c : Earth cover depth to the center of pipe (m)
$H_c = H_1 + D/2$
H_1 : Earth cover depth to the top of pipe (m)
D : Outside diameter of pipe (m)

- Marston's formula

$$W_f = \frac{\gamma}{2K \tan \phi}(1-e^{-2K\tan\phi\, H_c/B})B$$

Where, K : Constant

$$K=\frac{1-\sin\phi}{1+\sin\phi}$$

ϕ : Internal friction angle of soil (degree)
B : Width of trench at the top of pipe (m)

(3) Passive earth pressure

$$F_n = f_n L_p \cos\frac{\theta}{2}$$

Where, Fn: Passive earth pressure (kN)
f_n : Passive earth pressure per unit length of pipe (kN/m)

$$f_n = \frac{1}{2} C_e' \gamma (H_2^2 - H_1^2) R$$

Ce' : Coefficient
$Ce' = \tan^2(45^\circ + \phi/2)$
H_2 : Earth cover depth to the bottom of pipe (m)
R : Reduction ratio due to circular section of pipe (= 0.5)
L_p : Nominal length of pipe (m)

(4) Friction force

$$F_s = 2 f_s L \sin\frac{\theta}{2}$$

Where, F_s : Friction force (kN)
f_s : Friction force per unit length of pipe(kN/m)

$$f_s = \mu W_f \pi D$$

W_f : Earth pressure by backfill (kN/m^2)
μ : Coefficient of friction between pipe and soil

(5) Restrained length
The restrained length shall be so decided that the friction force F_s plus passive earth pressure F_n is larger than the thrust force P.

$$P \leqq (F_s + F_n)/S_f$$

Where, S_f : Safety factor (= 1.25)

- In case of $L \leqq L_p$
  In this case, L_p is replaced by L.

$$L \geqq \frac{S_f P}{2 f_s \sin(\theta/2) + f_n \cos(\theta/2)}$$

- In case of $L > L_p$

$$L \geqq \frac{S_f P - L_p f_n \cos(\theta/2)}{2 f_s \sin(\theta/2)}$$

The required restrained lengths on each side of bend for Kubolock at 1.0 MPa are tabulated in Table 8-9.

Required restrained lengths for Kubolock at 1.0 MPa **Table 8-9**

DN	Restrained length L on each side (m)				
	90°bend	45°bend	22-1/2°bend	11-1/4°bend	Pipe end
80	2.9	1.8	1.1	0.6	5.2
100	3.4	2.1	1.3	0.7	6.2
150	4.8	3.0	1.8	1.0	8.7
200	6.3	3.8	2.3	1.3	11.1
250	8.6	4.6	2.7	1.5	13.4
300	10.8	5.4	3.2	1.8	15.6
350	13.0	6.2	3.6	2.0	17.8
400	15.0	8.3	4.0	2.2	19.8
450	17.0	10.2	4.4	2.4	21.8
500	18.9	12.1	4.8	2.7	23.7
600	22.5	15.8	5.5	3.0	27.3

Calculation conditions;
- Internal pressure: 1.0 MPa
- Earth cover depth: 1.2 m
- Unit weight of soil: 16 kN/m^3
- Internal friction angle of backfill soil: 30°
- Friction coefficient: 0.3
- Pipe length: 4 m (DN80), 6 m (DN≧100)

8-8-2 Required restrained length for TF-type joint

As resistance forces, friction force between the pipes and the surrounding soil and passive earth pressure at the backside of the whole restrained pipes are considered. The required restrained length for moment-bearing restrained joint shall be calculated so that the resistance force comes to be not less than the thrust force and also the bending moment applied to the restrained joints does not exceed the allowable value of the joint.

Fig. 8-14

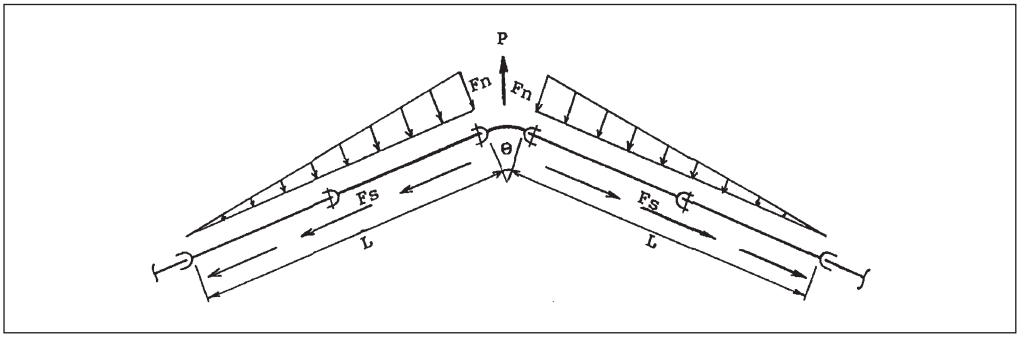

The required restrained length of pipes L_1 for the resistance forces is given by the below equation.

$$L_1 \geqq \frac{S_f P}{2f_s \sin(\theta/2)+f_n \cos(\theta/2)}$$

Where, S_f : Safety factor (= 1.25)

At the same time, the required restrained length of pipes L_2 for the bending moment is given by the below equation.

$$L_2 \geqq \frac{P_2/2+\sqrt{(P_2/2)^2-4f_nM_a/3}}{2f_n/3}$$

Where, P_2 : $P_2 = P\cos(\theta/2)$ (kN)
M_a : Allowable bending moment (kN-m)

The required restrained length of pipes shall be the larger one of L_1 and L_2.

The required restrained lengths on each side of bend for TF-type joint at 1.0 MPa are tabulated in Table 8-10.

Required restrained lengths for TF-type joint at 1.0 MPa **Table 8-10**

DN	Restrained length L on each side (m)				
	90°bend	45°bend	22-1/2°bend	11-1/4°bend	Pipe end
400	13.4	8.1	4.0	2.2	19.8
450	15.1	9.6	4.4	2.4	21.8
500	16.7	10.9	4.8	2.7	23.7
600	19.7	13.2	5.5	3.1	27.3
700	22.3	15.2	6.2	3.4	30.7
800	24.9	17.1	7.5	3.8	33.9
900	27.2	18.7	8.7	4.1	36.8
1000	29.3	20.3	9.8	4.4	39.6
1100	31.4	21.9	10.8	4.7	42.3
1200	33.3	23.2	11.6	5.0	44.8
1400	36.8	25.8	13.1	5.5	49.3
1500	38.4	26.9	13.8	5.7	51.4
1600	40.0	28.0	14.5	5.9	54.3

Calculation conditions;
- Internal pressure: 1.0 MPa
- Earth cover depth: 1.2 m
- Unit weight of soil: 16 kN/m^3
- Internal friction angle of backfill soil: 30°
- Friction coefficient: 0.3

Note:
(1) Use of collars at each end of the restrained pipeline is recommended.
(2) In case that the total restrained length is over 100 m at one portion, combination of restrained joint and concrete block is recommended because unexpected bending moment beyond the allowable value might be applied to the joint by ground movement and so forth.

Chapter 9 Corrosion Protection

9-1 Internal Corrosion Protection

9-1-1 Cement mortar lining for pipes

Cement mortar lining is the most common corrosion protection method for the internal surface of ductile iron pipes for water supply. Pipes are lined with cement mortar by centrifugal method.
The standard lining thickness is shown in Table 9-1.

Table 9-1

Nominal diameter DN	Lining thickness (mm)	
	Nominal	Minimum
80 to 300	3.5	2.5
350 to 600	5.0	4.5
700 to 1200	6.0	5.5
1400 to 2000	9.0	8.0
2100 to 2600	12.0	10.0

1) Type of cement
Cement will be ordinary Portland cement or sulfate resisting cement and the limit of the use is given in Table E.1 of BS EN 545 Annex E as below.

Table 9-2

Water characteristics	Portland cement	Sulfate resisting cement (including blast-furnace slug cement)
- Minimum value of pH	6	5.5
- Maximum content (mg/l) of:		
aggressive CO_2	7	15
sulfates (SO_4^{--})	400	3000
magnesium (Mg^{++})	100	500
ammonium (NH_4^{++})	3	300

2) Seal coating
In case of soft water supply, newly installed ductile iron pipes with cement mortar lining may cause the hardness-increasing (i.e. pH rising) problem due to the leaching of alkali components form the mortar lining. Even though this problem will be ceased in early stage, seal coating on the cement mortar lining may be effective to prevent it to a certain level. Bitumen or synthetic resin (e.g. epoxy or acrylic) paint is commonly used as a seal coating material.

9-1-2 Internal coating for fittings

Because of the non-straight pipe axis or non-uniform bore, fittings are lined with cement mortar by manual method or projection method. This lining application procedure is not suitable for mass production so that Kubota's standard internal protection of fittings for water supply is normally by about 0.1 mm thick synthetic resin (epoxy) coating. Much smoother internal surface of fittings compared with centrifugally cast pipes accepts such thin coating.
For soft water or acid water, fusion-bonded epoxy coating for DN1500 and smaller fittings and high-build type liquid epoxy coating for DN1600 and larger fittings can be used.

9-1-3 Aggressive fluids

When aggressive fluid for cement mortar lining will be transported through the pipe, special care shall be taken. Aggressive fluid for cement mortar lining will be:

1) Acid water (see Table 9-2)
2) Soft water (i.e. water with low contents of calcium and magnesium salts)
   As an evaluation method of the aggressiveness of water to cement mortar lining, Langelier Saturation Index will be commonly used (see Appendix A).
3) Sewage
   When temperature is high (e.g. more than 20℃), flow velocity is extremely low (e.g. below 0.3 m/s) and flow does not fill the pipe, sulfides in the anaerobic sewage will be reduced to hydrogen sulfide (H_2S) and finally to sulfuric acid (H_2SO_4) by bacteria which will damage the pipes and other facilities. These phenomena are observed on not only gravity sewer line but also pumping main at summit portions in the pipeline and at the discharge portions to the tank.

9-1-4 Special Lining

For aggressive fluid, special lining or other measures should be applied.

1) Epoxy coating
   Epoxy paint is of high-build 2-part liquid type and the thickness of the coating will be 300 or 500 microns depending on the type of aggressive fluid.
2) Fusion-bonded epoxy coating
   Fusion-bonded epoxy coating has excellent acid and chemical resistances and adhesion to the pipe. Fusion-bonded epoxy coating material is of solid powder and fuses and forms smooth and thick coating film when applied to the pre-heated pipe. Fusion-bonded epoxy coating will have a thickness of 300 or 500 microns depending on the type of aggressive fluid.
   Fusion-bonded epoxy coating contains no solvent therefore does less affect the quality of water in the pipeline.
3) Polyurethane coating
   Polyurethane coating material is of 2-part solvent free type and the standard thickness of the coating will be 1.0 to 1.5 mm.

9-2 External Corrosion Protection

9-2-1 Standard coating

It is well known that cast iron pipe is highly resistant to corrosion and consequently, cast iron pipes have a long service life. This is evidenced throughout the world by many instances of cast iron pipes having been in continuous use for more than 100 years without the need of repair or replacement. Ductile iron has the same chemical composition as cast iron and so possesses the same corrosion resistance.
Generally the external surface of ductile iron pipe and fittings is coated with at least 70 micron thick synthetic resin or bituminous paint. Nowadays zinc coating beneath the standard coating in accordance with ISO 8179 is commonly used. The zinc coating for pipe is metallic zinc spray and that for fittings is zinc rich paint and the application of zinc coating is not less than 130 g/m^2 in case of metallic zinc spray and 150 g/m^2 in case of zinc rich paint.

9-2-2 Protection in aggressive soil

When pipeline route is designed, it is recommended investigating the aggressiveness of the soil in which pipes to be laid.

①Generally following soils will be considered aggressive for ductile iron pipes:

- acid soil containing industrial wastes
- soils near the sea or soils containing high content of salts
- peaty, silty or marshy soil
- reclaimed land in industrial area
- ground where corrosion of existing steel/cast iron pipes was reported

②BS EN 545 Annex D gives the limits of the application of the standard coatings as below:
- soils with a low resistivity, less than 1500Ω-cm above the water table or less than 2500Ω-cm below the water table
- soils with a pH below 6
- soils with contamination by certain waters or organic or industrial effluents
- in the occurrence of stray currents or corrosion cells due to external metallic structures

③As an evaluation method of aggressiveness of soil, American standard ANSI/AWWA C105/ A21.5 may be adopted (See Appendix B).

9-2-3 Polyethylene sleeving method

Under normal conditions, standard coating will provide pipes and fittings sufficient protection to corrosion. However, when pipes and fittings are laid in corrosive soil areas, polyethylene sleeve corrosion protection method in addition to the standard coating is recommended. In this method the entire length of pipe is encased with 0.2 mm-thick polyethylene sleeves in the trench after pipes are jointed. Polyethylene sleeve prevents the direct contact between the pipe and aggressive soil.
Polyethylene sleeve is the most common corrosion prevention method for ductile iron pipe to the corrosive soil and is specified in ISO standard (ISO 8180) and national standards.

9-2-4 Special coating

Even though polyethylene sleeves will provide the pipes effective corrosion protection in corrosive soil, some ground conditions will limit the corrosion protection of ductile iron pipe by polyethylene sleeves. They are:
- Resistivity of the soil is less than 1000 Ω-cm and ground water fluctuates at the pipe
- Ground is rocky and ground water flows along the pipeline

In such case, special coating should be recommended.

1) Polyethylene coating
   Polyethylene coating is applied by continuous wrapping of the melted polyethylene sheet extruded from extruder. The standard thickness of the polyethylene coating is 2 to 3 mm varying depends on the pipe size. Spigot end is however free of polyethylene and is coated with epoxy paint to not hinder the assembling of the joints. After pipes are jointed, the jointed portion is normally protected with heat-shrinkable sleeve or plastic tape wrapping. Polyethylene coating can be applied to pipes only.
2) Polyurethane coating
   Polyurethane coating is applied by spray method. The standard thickness of polyurethane coating is 0.7 to 1 mm. Spigot end is however free of polyurethane coating and is coated with epoxy paint.
3) Tape wrapping
   Pipe is wrapped spirally with PVC or polyethylene corrosion protective tape. Tape wrapping is normally applied to pipes on site.

9-2-5 Coating for exposed piping

For the aboveground piping, zinc primer with finish coating conforming to ISO 8179-1 or 8179-2 is recommended.
However, pipelines installed inside or immediately outside of water treatment facilities and pumping stations may be coated with paints in distinguished color. In such case, coating system shown in Table 9-3 is recommended.

Table 9-3

Coating system	Type of paint	Nominal thickness (mm)	Coating work
1st	Zinc primer	0.02	At works
2nd	Epoxy paint	0.05	
3rd	Epoxy MIO paint	0.05	
4th	Epoxy /Polyurethane/Acrylic paint[1)]	0.04	On site
1) The 4th coating will be epoxy for pipeline to be immersed in water and polyurethane or acrylic coating for pipeline to be exposed to air.			

9-3 Electrolytic Corrosion Protection

There are two major causes of electrolytic corrosion, namely by stray current and long line current.
Stray current is common near electric railroads, structures with cathodic protection and large D.C sources such as generators. Electric current leaked from such sources into the underground metallic pipeline and at where electric current flow out into the ground, pipeline is severely corroded.
Long line current is caused on the metallic pipeline which is laid through the different type soils. The difference of the ground causes the difference of electric potential which leads the flow of electric current and at where the current flow out, pipe is corroded.
These stray current and long line current are serious problem for weld-jointed steel pipeline. Ductile iron pipeline has inherently electrolytic corrosion resistance because it is insulated at every 6 or 9 meters by rubber gasket at each joint and does not form an electrically continuous body. Therefore normally special protection is not necessary when a pipeline is laid across or in parallel to a railway for electric car by direct electric current.
However if there is a risk of electrolytic corrosion, one of following measures should be taken.

1) to change the pipeline route to be sufficiently apart from cathodically protected underground facilities
2) to isolate the pipeline with steel sheathing pipe, polyethylene sleeve, or isolative coating such as polyethylene or polyurethane.

9-4 Cathodic Protection

The use of cathodic protection systems for ductile iron pipeline is not recommended because there is more effective and economical protection system, e.g. polyethylene sleeving. However, if cathodic protection is designed on ductile iron pipeline, pipes should be coated with a sophisticated coating (e.g. polyethylene or polyurethane coating) and each joint must be over-bonded with strap(s).

Appendix A: Langelier Saturation Index (LSI)

LSI = pHa – pHs
Where, pHa: Actual pH
pHs: pH of calcium carbonate saturation
pHs = -log ($[K'_2]/[K's_0] \times [Ca^{2+}] \times [Alk]$)
$[K'_2]/[K's_0]$: Constant
$[Ca^{2+}]$: Calcium ion in moles per litre
[Alk]: Total alkalinity in equivalents of $CaCO_3$ per litre
When the calculated value of LSI is zero, the water is exactly saturated in equilibrium with solid calcium carbonate. The positive value of LSI indicates the water is supersaturated, and is not corrosive. However when the value of LSI is negative, the water is undersaturated and is corrosive. Such water should be treated to increase pH or hardness to protect the pipeline.

Appendix B: Soil aggressiveness evaluation method by ANSI/AWWA C105/A21.5

In ANSI/AWWA C105/A21.5, aggressiveness of the soil is evaluated through the measurements of five properties of the soil (i.e. Resistivity, pH, Redox potential, Sulfides, and Moisture). Points are assigned according to the measured values of these characteristics, and corrosion protection (by polyethylene sleeves) is recommended when the total of these points is 10 or more (see Table 9-4).

Table 9-4

Soil Characteristics		Points
Resistivity (based on water-saturated soil box)	<1500 ohm-cm	10
	1500 to 1800 ohm-cm	8
	1800 to 2100 ohm-cm	5
	2100 to 2500 ohm-cm	2
	2500 to 3000 ohm-cm	1
	>3000 ohm-cm	0
pH	0 to 2	5
	2 to 4	3
	4 to 6.5	0
	6.5 to 7.5	0*
	7.5 to 8.5	0
	>8.5	3
Redox-potential	> 100 mV	0
	50 to 100 mV	3.5
	0 to 50 mV	4
	Negative	5
Sulfides	Positive	3.5
	Trace	2
	Negative	0
Moisture	Poor drainage, continuously wet	2
	Fair drainage, generally moist	1
	Good drainage, generally dry	0
*If sulfides are present and low or negative redox-potential results are obtained, add three points for this range.		

Chapter 10 Pipeline Drawings

10-1 Drawing Procedure of Piping Diagrams

Fig. 10-1 shows the procedure for drawing the piping diagrams with examples.

Flow chart for drawing procedure of piping diagrams Fig. 10-1

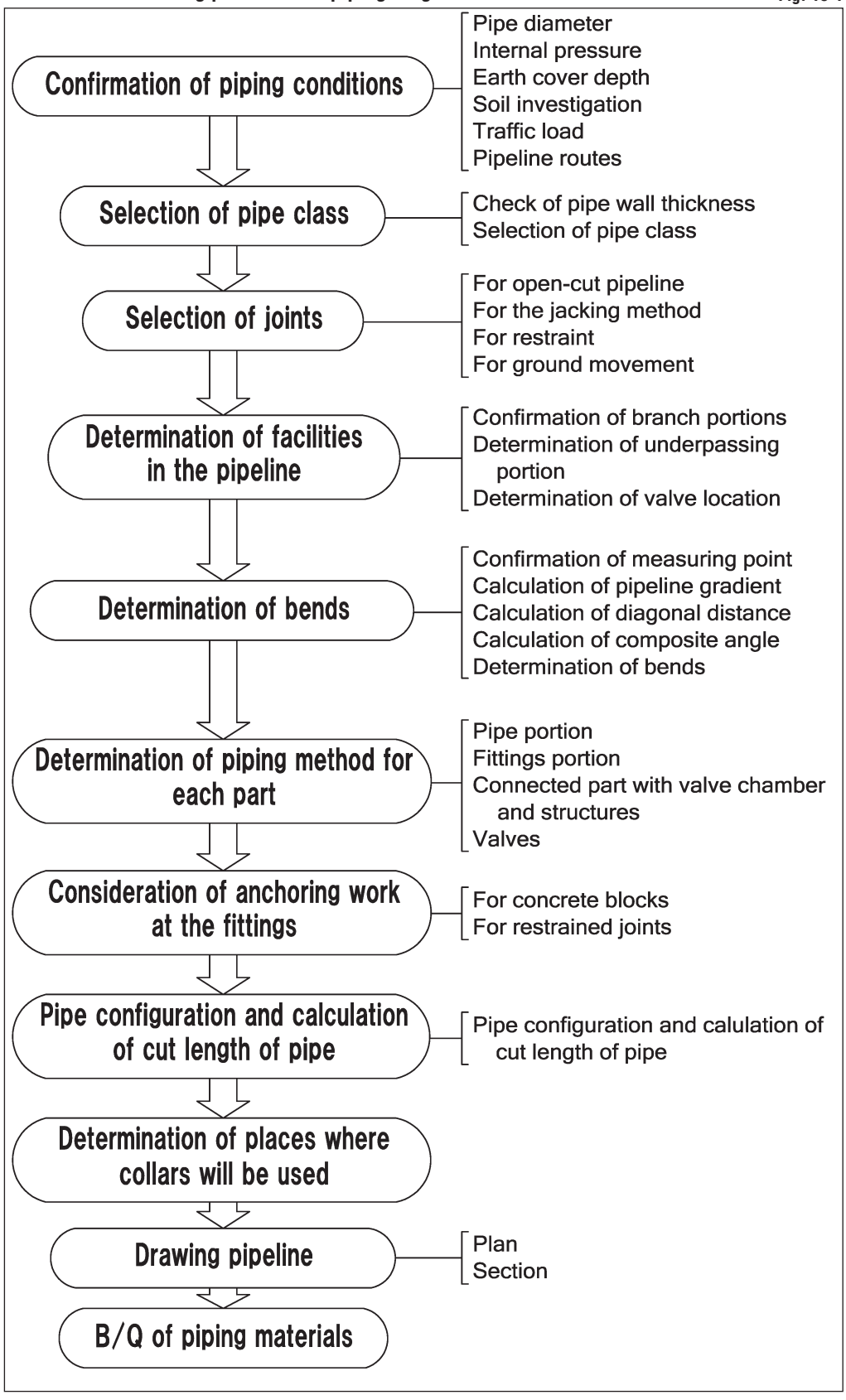

10-2 Confirmation of Piping Conditions

An example of DN200 pipeline is shown in Fig. 10-2 and 10-3.

Survey drawing for DN200 pipeline (plan)

Fig. 10-2

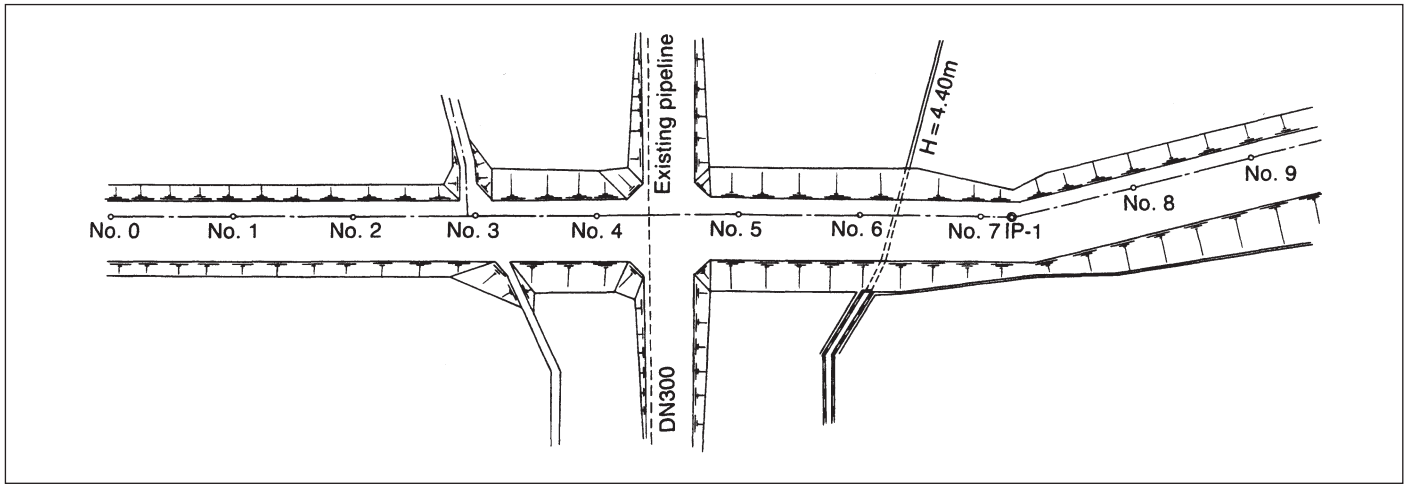

Survey drawing for DN200 pipeline (section)

Fig. 10-3

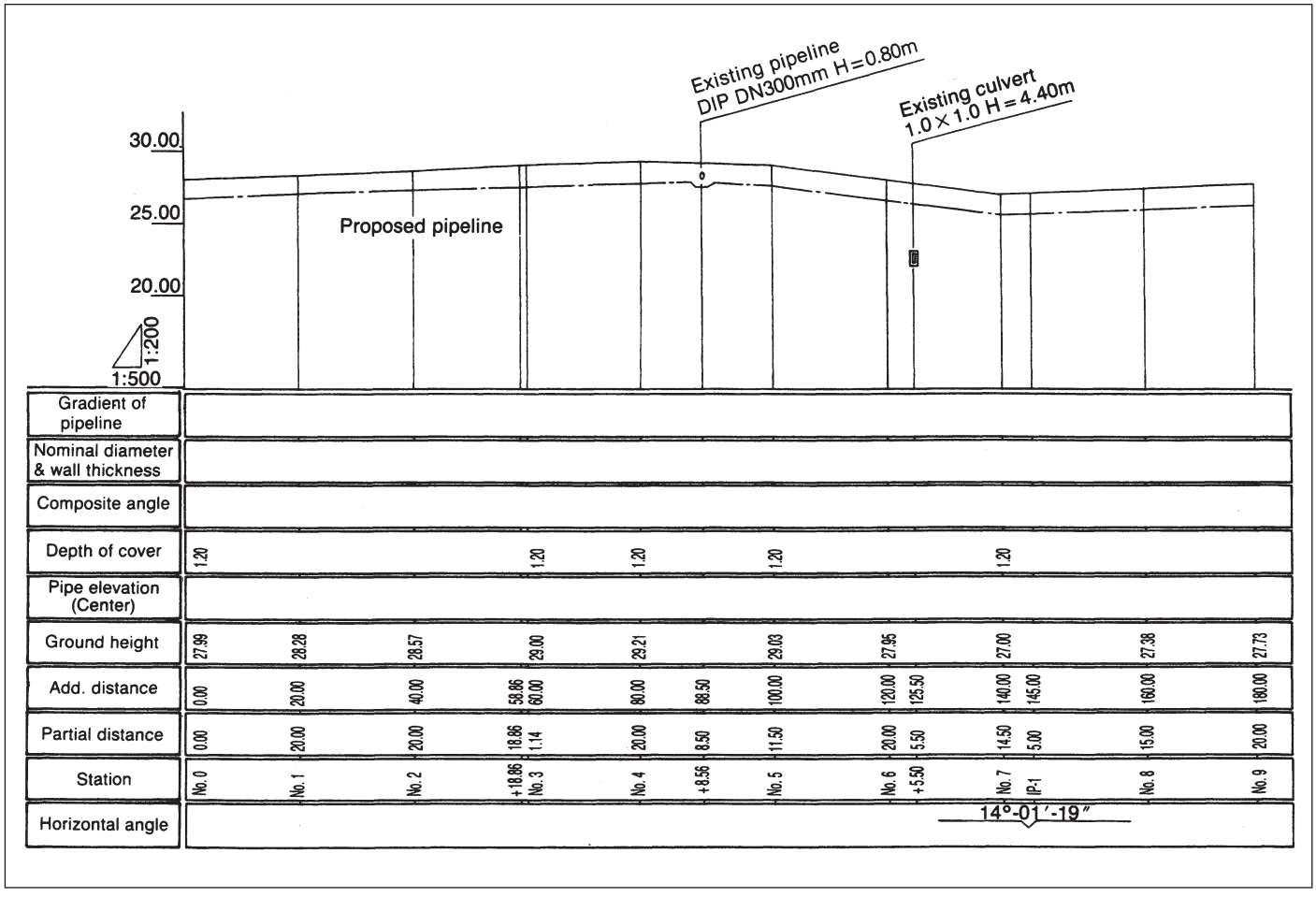

The following pipeline conditions are verified in accordance with the design references.

Table 10-1

Procedure	Example
(1) Pipe diameter Examine the diameter of the main pipe and branches.	Main: DN200 Branch: DN100
(2) Internal pressure Check the total pressure of static pressure and water hammer.	Static pressure: 4.5 bar Water hammer: 5.5 bar
(3) Earth cover 1) For public roads, pipes should be installed according to the corresponding regulations as well as upholding agreements with road administrator. 2) When pipes are laid in locations other than public roads, environmental conditions around the site, future planned projects, etc. should be considered. 3) Consideration should be given to the buried objects. 4) In cold regions, pipe should be buried at a level deeper than the freezing depth. 5) When buried under roadways with a shallow earth cover, pipes should be protected from damages by reinforcement work or pavement, if necessary. This protection can be accomplished by placing concrete slabs or reinforced concrete slabs on the road surface above the pipeline, or by installing gate- or box-type rigid frame.	Earth cover: 1.2 m
(4) Soil investigation Investigate the soil for the safe and economical piping design.	Sandy soil with low corrosiveness
(5) Traffic load Traffic load due to trucks or railroad should be considered.	Simultaneous passage of two 200 kN trucks
(6) Pipeline route Confirm the route and position of pipeline referring to survey maps (plan and section).	In accordance with Fig. 10-2 and 10-3

10-3 Selection of Pipe and Fittings

As for pipes, Class K-9 is normally used. In certain situations however, pipes with other class will be used depending on the working condition or laying condition; for example, when the earth cover is extremely deep or shallow, or working pressure is extremely high or low. (Refer to Chapter 7)
As for fittings, various kinds of fittings are available from standard production. As far as practically possible, these standard fittings should be employed in the piping design. Fittings designed for special purposes are available as well, however they may be more expensive than standard one.

10-4 Selection of Joints

Joints should be selected from the standpoint of their function. (Refer to Chapter 12)

10-5 Determination of Piping Composition

An example of piping composition determination is shown in Table-10-2.

Table 10-2

Procedure	Example
(1) Confirmation of piping branches The position of branches and the pipe diameter are verified in accordance with the design references.	Branching the pipe to DN 100mm at measuring point No.2+18.86m, according to Fig. 10-2 and 10-3.
(2) Determination of underpassing parts The underpassing method is determined by confirming the existence of buried objects (piping obstacles) according to the vertical survey map. If this is the case, a distance of at least 30cm between the pipe and the buried object should be maintained.	Referring to Fig. 10-3, an existing buried pipe (Ductile iron pipe: DN300mm) is observed at measuring point NO.4+8.5m. Underpassing can be carried out as below. Fig. 10-4 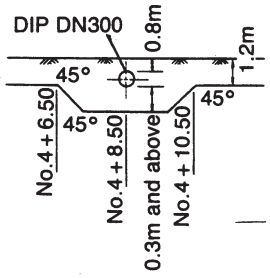
(3) Location of valves Fig. 10-5 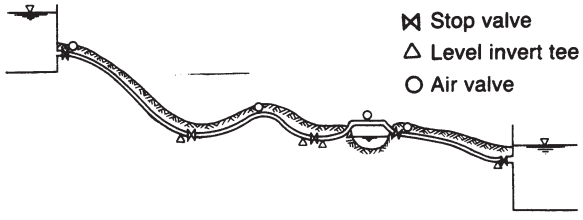 1) Stop valves 1. Valves should be located to reduce the affected area of water supply by the operation of a few valves. 2. Stop valves are installed on branch pipes at the point of branching of the distribution line, and also generally placed in the main pipe on the down-stream side of the branch point. 3. Stop valves are installed on both sides of important points on the main pipeline, such as underpassings, bridges, railway crossings, etc. In addition, they are also installed on drainage pipes and on connecting pipes between different distribution pipelines.	Valves are installed at the following positions. —Down stream side of branch point in the main pipe: DN200mm gate valve (measuring point No.3). Branch pipe: DN100mm gate valve (No. 2 +18.86). Drainage: DN80mm gate valve (IP-1)

Table 10-2

2) Air relief valves 1. These valves are usually placed at high points (summits) of pipeline. However, if there is no high point (summit) between the stop valves, an air relief valve is placed immediately below the upper stop valve. It is not necessary to install an air relief valve if there is no summit between valves in the distribution branch pipeline. 2. Double orifice air valves are installed for pipes DN400mm and above in diameter 3. If necessary, a stop valve is attached to the air relief valves for maintenance.	Summit of pipeline: quick exhaust valve (No.4 + 16.56m) DN200mm × DN25mm, one unit.
3) Fire hydrants 1. Fire hydrants are installed at convenient spots for fire fighting, such as at street intersections and roadway forks. In addition, they are installed at 100-200m intervals along the roads depending on the situation of buildings facing the roads. 2. Single orifice fire hydrants are installed on pipes of DN150mm and above, and double orifice fire hydrants to pipes of DN300mm and above, except in cases of very high water pressure or unavoidable circumstances. In addition, the placement and types of fire hydrants must be in accordance with fire fighting authorities.	
4) Wash-out (Blow-off) facility 1. Wash-out facilities should be installed in the concave section (low point) of the pipeline, adjacent to locations where there are proper drainage paths or rivers. It is desirable that water sampling devices for water quality analysis be attached to the wash-out facility. 2. Standard diameter of drainage pipeline is 1/3 to 1/6 of the main pipe's diameter. It is advisable to enlarge the diameter of drain pipe if discharge into an existing waterway is possible. 3. If the discharge water level is higher than the pipe bottom level, a catch pit should be placed between level invert tees and the discharge outlet. 4. Dikes around the discharge outlet should be solidly constructed so as not to be eroded or destroyed by the discharged water.	Concave part of pipeline Level invert tee (IP-1)

10-6 Determination of Bends

Calculation sheet for pipe arrangement (Table 10-7) is necessary to decide on the use of bends.

Table 10-3

Procedure	Example
(1) Confirmation of measuring points At the same time each measuring point along pipeline route is verified, other measuring points must be added at additional places such as underpassing.	Additional measuring point No.2 + 18.86 (branch portion) No.4 + 6.50, No.4 + 8.50, No.4 + 10.50 (Underpassing portion)
(2) Description of horizontal distance The horizontal distance between each station is described.	Refer to Table 10-7
(3) Calculation of pipeline gradient If the pipeline is inclined, the gradient between two main stations is calculated. Fig. 10-6 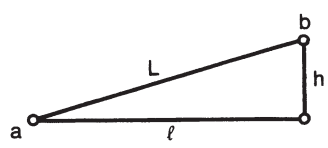 Gradient of pipeline $i = \frac{h}{\ell}$ Where, h = (Ground height at station b − Earth cover) − (Ground height at station a − Earth cover)	From Fig. 10-3, Station No. 0 ~ No. 3 $i = \frac{(29.00 - 1.2) - (27.99 - 1.2)}{60}$ $= -0.0168$ In the same way, the pipeline gradient (i) between other stations is calculated. Refer to Table 10-7
(4) Calculation of diagonal distance The diagonal distance between each station should be calculated. $L = \frac{\ell}{\cos \alpha}$ Gradient angle $\alpha = \tan^{-1} i$	The diagonal distance between station No. 0 and No. 1 is obtained taking into account the gradient $\alpha = \tan^{-1} (0.0168)$ $= 0.962°$ in reference to section (3) $L = \frac{20}{\cos 0.962} = 20.0028$ $\fallingdotseq 20.00m$

Table 10-3

(5) Calculation of composite angle

The composite angle at stations which have two or more angles of vertical and horizontal components should be calculated.

(Vertical angle: A, B)

Fig. 10-7

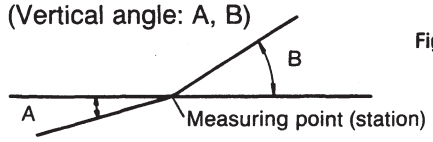

A: Gradient angle ahead of station

B: Gradient angle behind station

(Horizontal angle: C)

Fig. 10-9

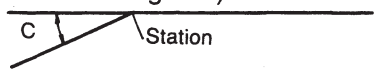

(Composite angle: θ)

$$\cos\theta = \cos C \times \cos A \times \cos B + \sin A \times \sin B$$

Fig. 10-11

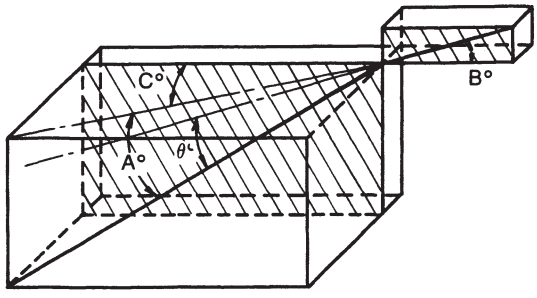

The composite angle at IP-1 is calculated. (Vertical angle: A, B)

Fig. 10-8

(Horizontal angle: C)

Fig. 10-10

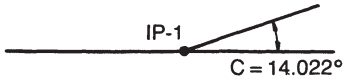

(Composite angle: θ)

$$\cos\theta = \cos 14.022° \times \cos 1.048° \times \cos 1.048° + \sin 1.048° \times \sin 1.048°$$

$$\theta = 14.020°$$

Let's obtain the composite angle at station No. 4 + 10.50

(Vertical angle: A, B)

No. 4 + 10.50

Fig. 10-12

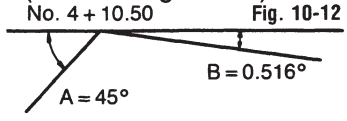

Ascending gradient: +

Desending gradient: −

(Horizontal angle: C)

C = 0°

(Composite angle: θ)

$$\cos\theta = \cos 0 \times \cos 45° \times \cos(-0.516°) + \sin 45° \times \sin(-0.516°)$$

$$\theta = 45.516°$$

In the same way, the composite angle (θ) at other stations can be calculated.

Refer to Table 10-7

Table 10-3

(6) Deciding on use of bends The most suitable bends (single or combination bends of 90°, 45°, 22-1/2°, 11-1/4°) are selected for stations which consist of single or composite angles. In this case, bends which have angles less than the allowable bending angle of the joint can be avoided.	Assuming that the T-type joint is used, the allowable bending angle of DN200 in diameter is 5°00′. At IP-1, composite angle $\theta = 14.020°$. Therefore, 11-1/4° bend is used for the piping and pipes are deflected at the joints.
When the angle at bends cannot be adjusted correctly, it is possible to adjust the angle by deflecting the pipes at the joints within the allowable angle of deflection. Fig. 10-13 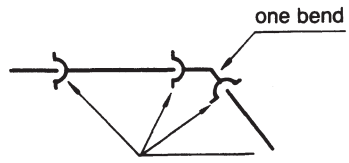 When the angle at a bend isn't exactly right, pipes should be deflected at the joint.	At station No. 4 + 10.50 Composite angle $\theta = 45.516°$ Therefore, 45° bend is used for piping and pipes are deflected at the joints.

10-7 Determination of Piping Method

Piping methods for the straight pipeline portions, fittings portions and valve chamber portions are determined as shown in Table 10-4. An example of pipe arrangement in valve chambers are shown in Appendix-2.

Piping examples for each portion Table 10-4

Type \ Ground category	Ordinary ground	Soft ground
(1) Straight portion	Fig. 10-14	
(2) Bend portion	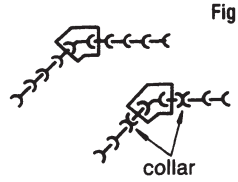 Fig. 10-15	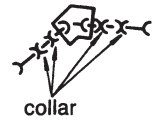 Fig. 10-16
(3) Tees (Branch portion)	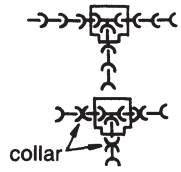 Fig. 10-17	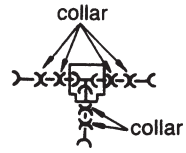 Fig. 10-18
(4) Inclining portion	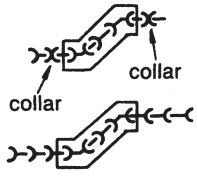 Fig. 10-19	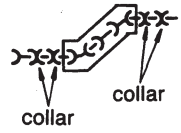 Fig. 10-20
(5) Underpassing sections	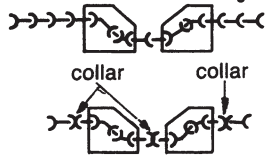 Fig. 10-21	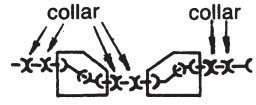 Fig. 10-22
(6) Both sides of valve chamber	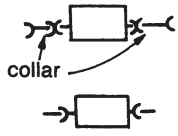 Fig. 10-23	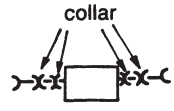 Fig. 10-24
(7) Sections connected to a structure	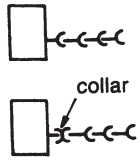 Fig. 10-25	Fig. 10-26

Note: 1) T-, K-type joint; K-type collar; Concrete anchor block; Valve chamber, structures

2) Collars are preferrably used on both sides of valve chambers and structures in soft ground, after taking into consideration the possibility of uneven settlement. (Refer to Chapter 14)

10-8 Anchoring of Fittings

Fittings such as bends and tees are affected horizontally or vertically by thrust forces caused by internal pressure of the pipeline. Consequently, fittings may move and joints be separated. Such fittings must be anchored against the thrust forces. For anchoring, various methods may be employed, including concrete block and restrained joints. A combination of the concrete block and restrained joints can be applied. (Refer to Chapter 8)

10-9 Calculation of Pipe Cut Length

Table 10-5

Procedure	Example
(1) Dimension survey of fittings Each dimension of the fittings used for shaped portion is checked.	The dimensions of each section are measured at station No.2 + 18.86. (In case of ISO 2531) Fig. 10-35 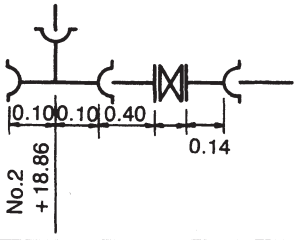
(2) Pipe configuration and calculation of cut length of pipe The number of pipes used and the length of cut pipe are calculated by the diagonal length between stations. $\frac{(L-a)}{\ell} = N'$ The number of pipes N is an integer, omitting fractional part of N′ $(L-a)-(N\times\ell)=b(m)$ In principle, the minimum length of cut pipe is one meter, and the length should be determined on the basis of economy and working conditions. L : Diagonal distance (m) ℓ : Unit length of pipe (m) a : Unit length of fittings (m) N : Number of pipes b : Length of cut pipe (m)	Pipe arrangement is carried out between station No.0 and No.2 + 18.86. Diagonal distance: 58.86m (See Table 10-7) Unit length of DN200mm pipe: 5m. $\frac{(58.86-0.10)}{5} = 11.75$ (pipes) As a result, the number of pipes N is 11. $(58.86-0.10)-(11\times5)$ $=3.76$m Consequently the results are as follows. Fig. 10-36 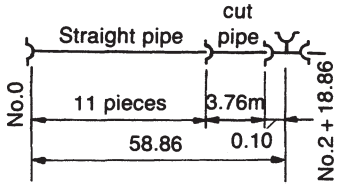

10-10 Use of Collar

Basically collars are used at the following points.
(1) Connection of two pipelines laid from opposite sides
(2) Connection to structures such as valve chamber
(3) Where a large deflection angle is necessary such as where uneven settlement is expected
(4) Both sides of a long pipeline composed only of restrained joints
(5) Other sections where required from an installation viewpoint

Application example of collar for connecting two pipelines Fig. 10-37

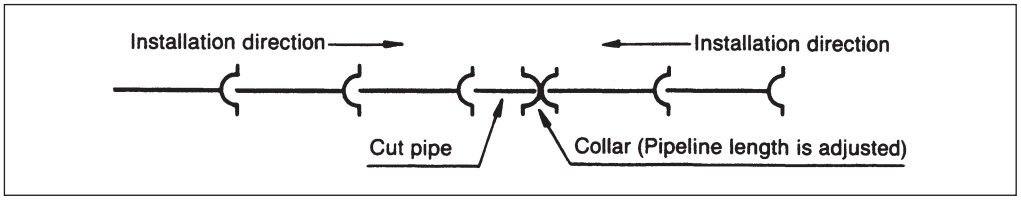

Application example of collar for connecting to structure Fig. 10-38

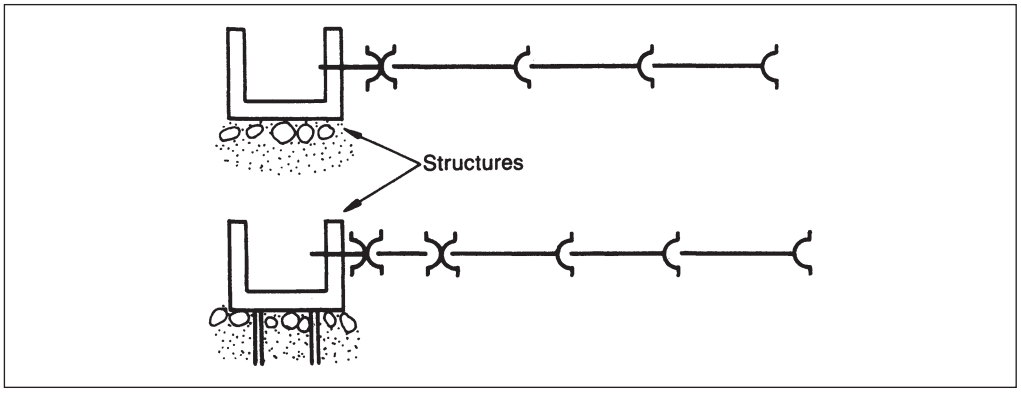

Application example of collar at different stratum Fig. 10-39

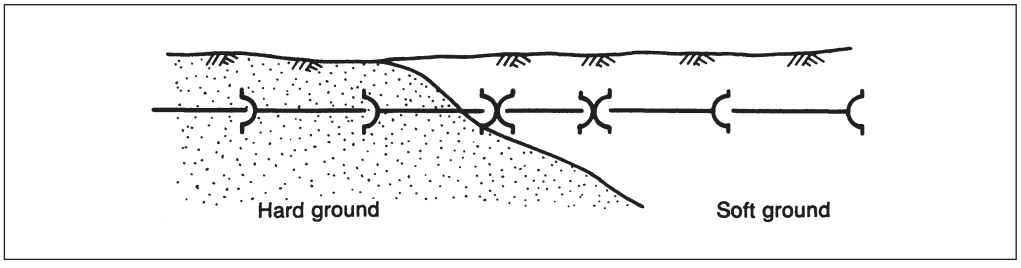

Application example of collar at long pipeline with restrained joints Fig. 10-40

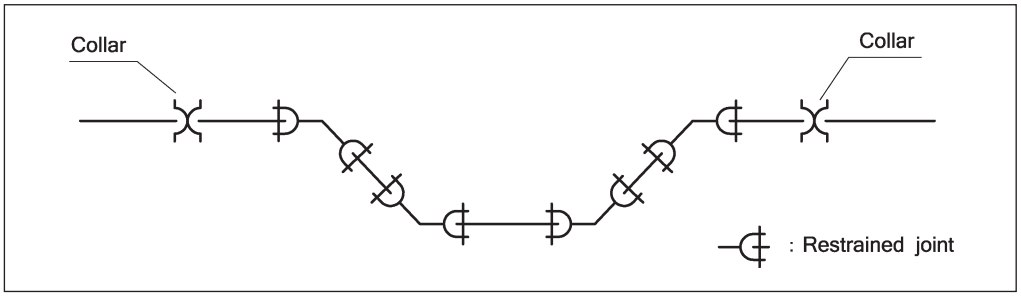

10-11 Drawing Piping Diagrams

Referring to Fig. 10-41 and 10-42, valves, fittings, cut pipes and structures are indicated by symbols. For congested sections, it is preferable to prepare detailed drawings. Preferable scale of the drawing is 1/200 to 1/500.

10-12 Bill of Quantity of Materials

Bill of quantity of the piping materials is determined by calculating the materials according to the pipeline drawings. Careful calculation without omission is imperative. Cut pipes should be described in an attached table.

Calculation chart for pipe arrangement

Table 10-6

DN200mm Pipeline

Fig. 10-41

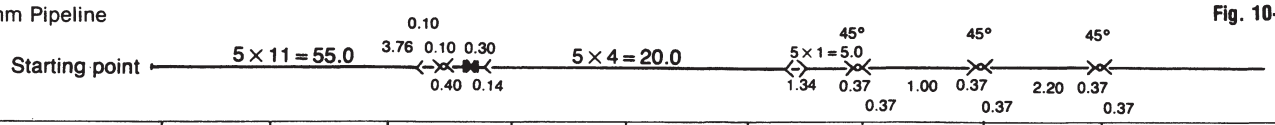

Slope distance (m)		20.00	20.00	18.86	1.14	20.01	6.50	1.74	2.94	1.74	
Horizontal distance (m)		20.00	20.00	18.86	1.14	20.00	6.50	1.23	2.94	1.23	
Difference of pipe elevation (m)					1.01	0.21					
Station		No.0 + 0.00	No.1 + 0.00	No.2 + 0.00	No.2 + 18.86	No.3 + 0.00	No.4 + 0.00	No.4 + 6.50			No.4 + 11.90
Deflection angle	Verticality A		0.962°	0.962°	0.962°	0.962°	0.602°	− 0.516°	− 45°	0	
	Verticality B		0.962°	0.962°	0.962°	0.602°	− 0.516°	− 45°	0	45°	
	Horizontality		—	—	—	—	—	—	—	—	
	Composition		—	—	—	0.360°	1.118°	44.484°	—	—	
Bends used			—	—	—	—	—	45°	45°	45°	
Other fittings				All socket tee DN200 × DN100	Flanged socket flanged spigot sluice valve DN200						
Pipe (number)			11			4	1				
Cut pipe			(B) 3.76				(B) 1.34	(B) 1.00	(B) 2.20	(B) 1.00	
Gradient i		i = 0.0168				i = 0.0105	i = 0.0090	i = 1.0	Level	i = 1.0	

Fig. 10-42

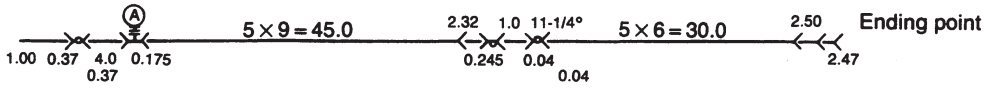

Slope distance (m)		8.10	20.02	20.03	5.00	15.00	20.01				
Horizontal distance (m)		8.10	20.00	20.00	5.00	15.00	20.01				
Difference of pipe elevation (m)			− 0.18		− 2.03			0.73			
Station		No.4 + 11.90	No.5 + 0.00	No.6 + 0.00	No.7 + 0.00	IP-1	No.8 + 0.00	No.9 + 0.00			
Deflection angle	Verticality A	45°	− 0.516°	− 2.908	− 2.908°	1.048°	1.048°				
	Verticality B	− 0.516°	− 2.908°	− 2.908°	1.048°	1.048°	1.048°				
	Horizontality	—	—	—	—	14.022°	—				
	Composition	45.516°	2.392°	—	3.956°	14.020°	—				
Bends used		45°	—	—	—	11-1/4°	—				
Other fittings		Air valve on 25 double flanged pipe flanged tee DN200 × DN80			Level invert tee DN200 × DN80						
Pipe (number)			9		(B) (B)	6	(A) (A)				
Cut pipe		(B) 4.0			2.32 1.00		2.50 2.47				
Gradient i		i = 0.009	i = 0.0508		i = 0.0183						

Note: Cut pipe(A) refers to socket and spigot cut pipe. Cut pipe (B) refers to double spigot cut pipe.

DN200 pipeline (plan)

Fig. 10-43

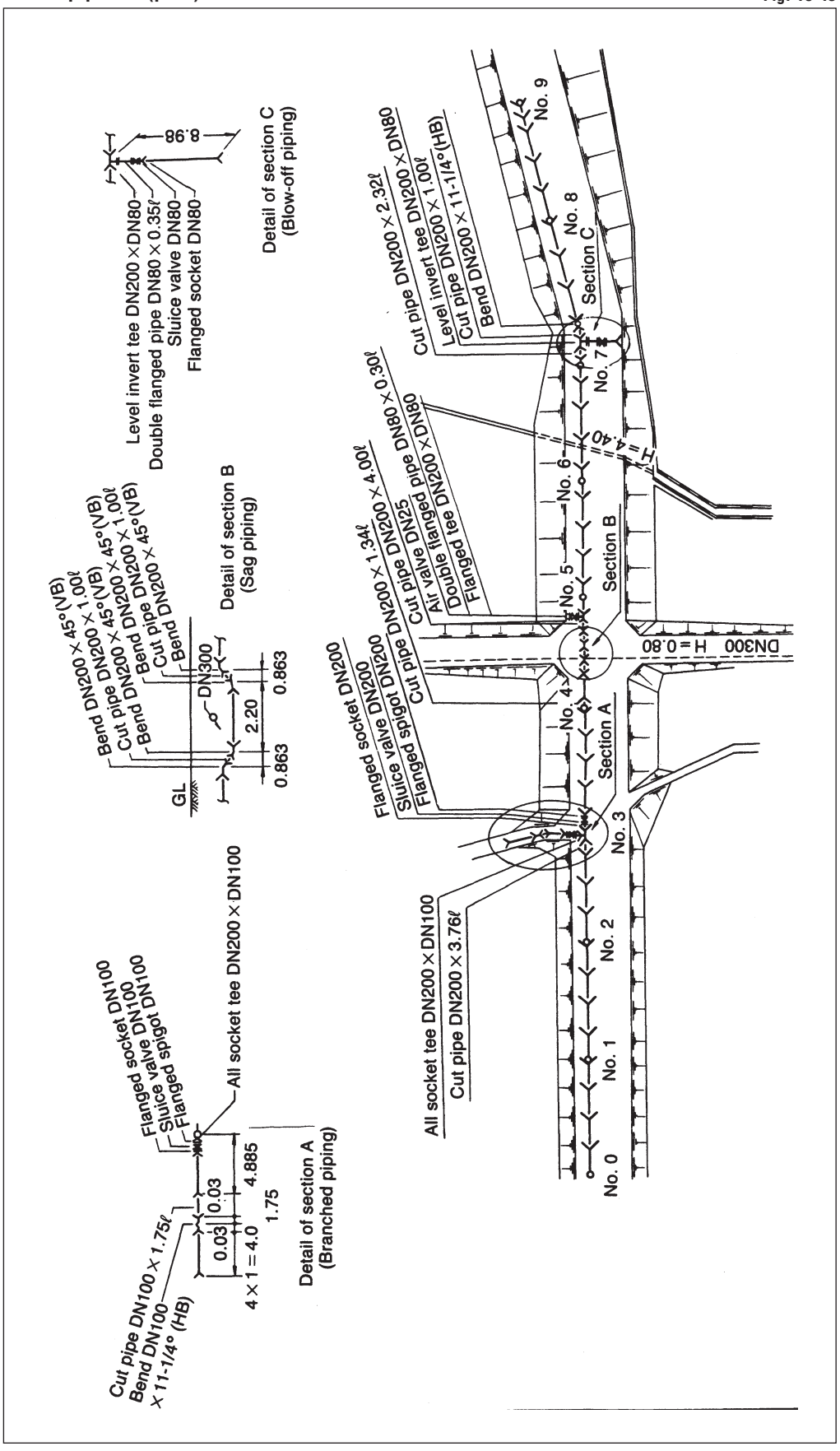

DN200 pipeline (section)

Fig. 10-44

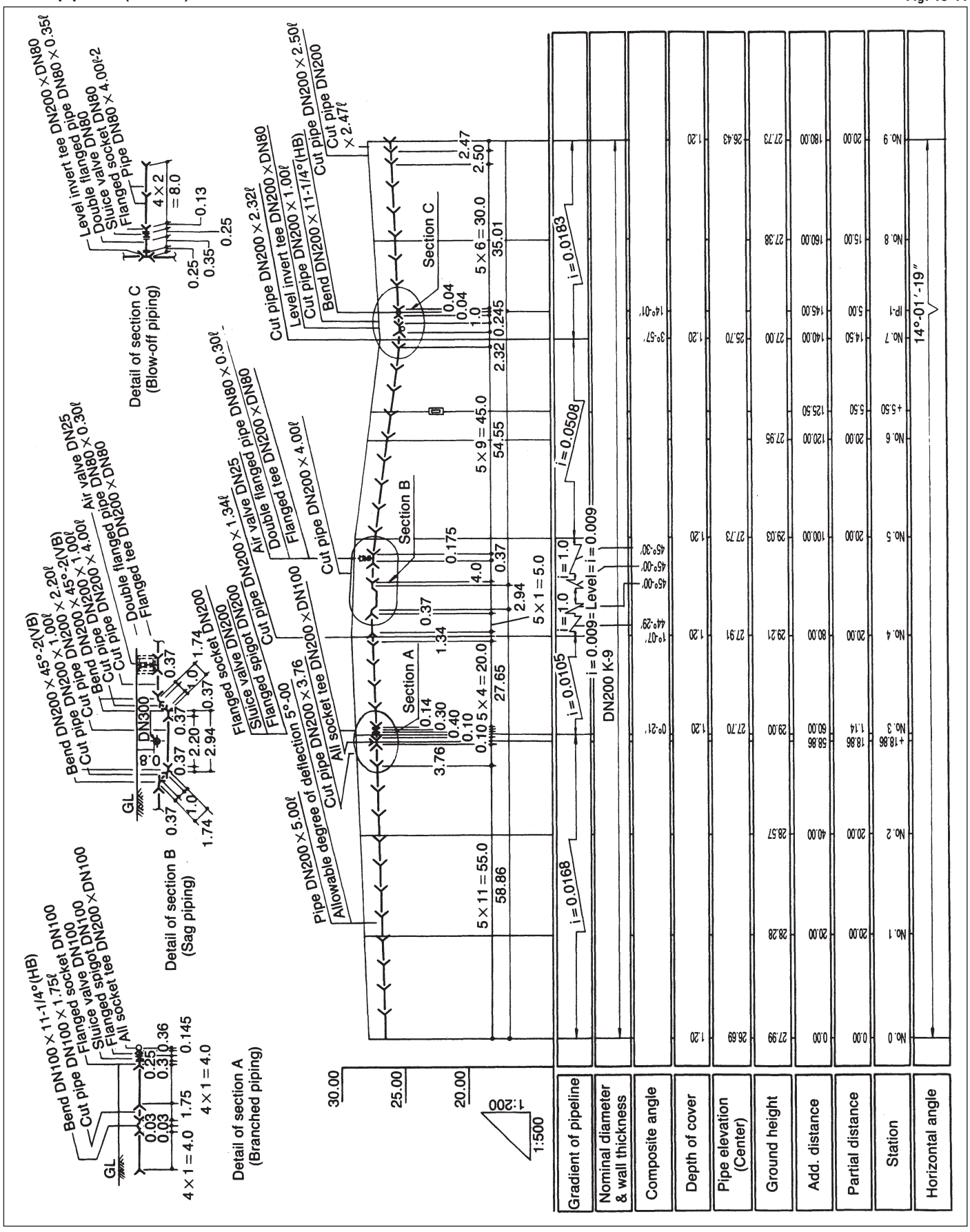

Chapter 11 Installation

11-1 General

This chapter offers recommendations for appropriate trench conditions for ductile iron pipelines.

11-2 Unloading from Truck

Pipes shall be unloaded by lifting with crane or forklift. When crane is used pipes shall be lifted with wire ropes or nylon slings. In this case ensure the pipes are correctly balanced. Pipes should not be lifted with a single wire rope. Use of hooks covered with rubber sheets or cloths are recommended to prevent the damage of the external coating and internal lining of the pipe. Each fitting shall be lifted with wire rope or nylon sling passed through it. In this case coverage should be provided to the wire rope or nylon sling at each end of the fittings to prevent rapid abrasion.

Fig. 11-1

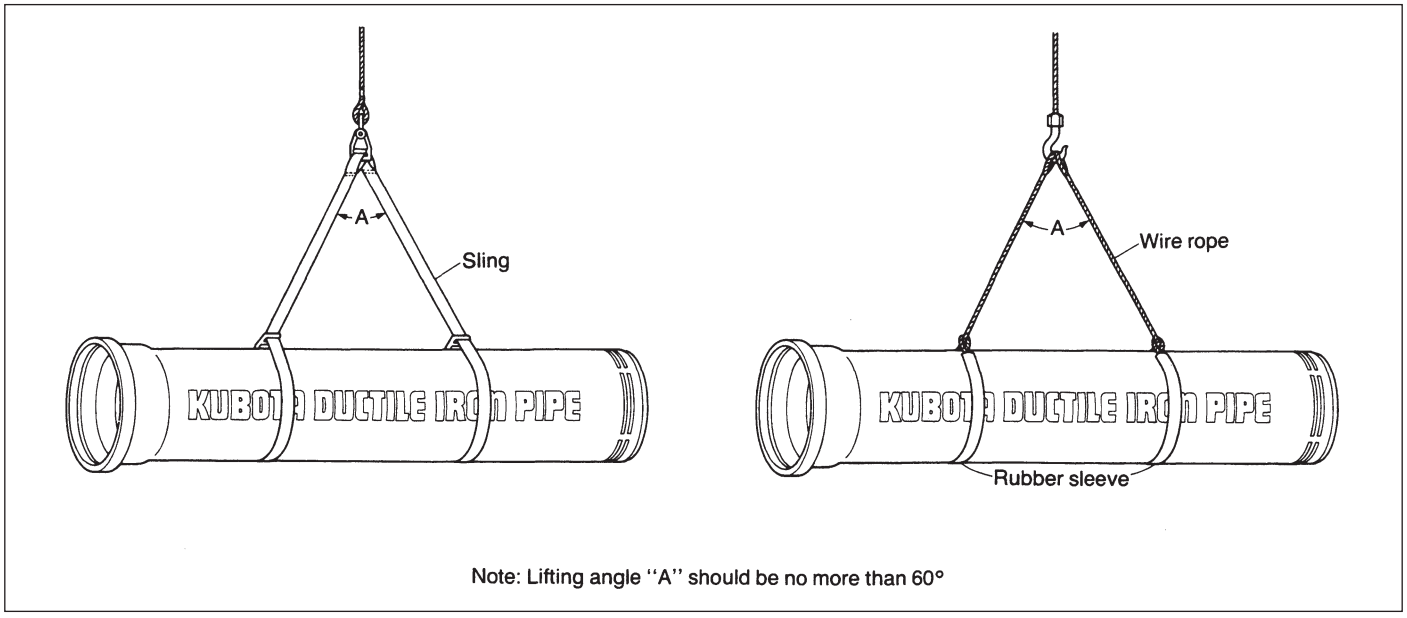

Fig. 11-2

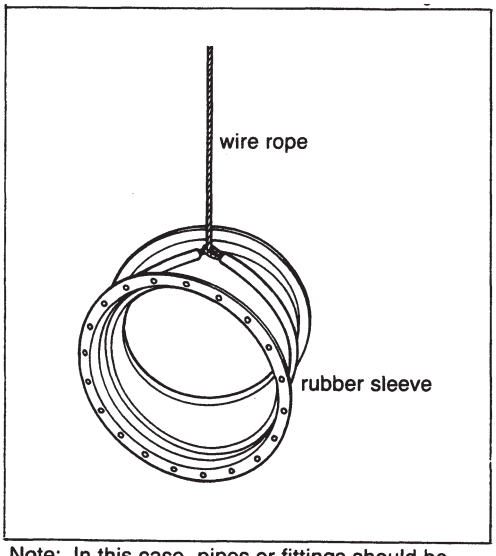

Note: In this case, pipes or fittings should be lifted at the mass center of gravity to maintain the balance of pipes and fittings.

11-3 Storage

Pipes shall be stocked on the level ground. Timbers, having enough height to prevent direct contact of the pipe with the ground, shall be placed so that each end of pipe protrudes about one meter from the timbers. The number of the timbers will be 3 for 4 or 5 m long pipe, 4 for 6 m long pipe and 6 for 9 m long pipe. Pipes shall be secured with chocks before releasing wire ropes otherwise pipes may fall off.
Pipes should be stacked on timbers within the recommended tiers in Table 11-1.

Recommended stacking tiers **Table 11-1**

DN	Recommended number of stacking tiers for K-9 pipe	
	Square stacking	Pyramid stacking
80	20	-
100	17	-
150	14	-
200	11	-
250	10	-
300	8	12
350	7	12
400	6	12
450, 500	5	9
600	4	8
700	3	7
800	3	6
900, 1000	3	5
1100, 1200	3	4
1400	2	3
1500, 1600	2	2
1800 to 2600	1	1

11-4 Trenching

11-4-1 Width of trench

The width of trench should be ample enough to permit pipe to be laid and jointed properly. The recommendable trench width for ductile iron pipe will be typically nominal diameter of pipe plus 600 mm (e.g. 1200 mm in case of DN600) and more at the top of the pipe.
However, trench width shall be decided depending on the ground condition. In case of soft ground, trench shall be widened or sheeting shall be provided to prevent the collapse of the trench wall. When rocks are encountered during excavation, all rocks have to be removed to provide a clearance of at least 150 mm below and on each side of pipe for DN600 and smaller, and 250 mm for DN700 and larger.
Extra width should be provided to permit placement of timber supports, sheeting, bracing and appurtenance when they are employed.
In case that pipeline is deflected at the joint the trench shall be widened appropriate for the amount of deflection.

11-4-2 Depth of trench

When pipe will be laid under a public road, the depth of trench should be accomplished in accordance with national or local regulations.
The depth of the pipeline should be decided in order to protect the pipe from damage caused by earth pressure and traffic loads. Under a public road with traffic loads, nominal covering depth between the top of the pipe and ground surface should be 1.2 m under traffic road or 1.0 m under non-traffic road and in any case not less than 0.6 m unless otherwise specified. If it is impossible to make the covering depth more than 0.6 m, pipe should be protected by paving the road surface above the pipe with concrete slabs or surrounding with rigid box type or gate type concrete frame.
When pipe is laid under sidewalk or road where no vehicular traffic is permitted reduced covering depth will be allowed. However where water table is high and

threatens to float the pipe, pipe should be laid with enough covering depth to prevent floating.
When pipe is laid across or close to other underground facilities, a distance of at least 0.3 m should be maintained.

11-4-3 Bell holes

Holes for pipe sockets should be provided at each joint, but should be no larger than necessary for joint assembly and for assurance that pipe barrels will lay flat on the trench bottom.

11-4-4 Condition of trench bottom

Trench bottom should be true and even in order to provide support for full length of the pipe barrel. Generally pipes can be laid on the flat trench bottom directly without special bedding in normal ground condition. However bedding by sand or selected material should be provided especially when the ground is rocky or soft.
For soft ground, sand will be spread in the trench bottom to a depth of at least 300 mm or half of the nominal diameter of pipe whichever is larger. In case that ground is extremely soft and is unstable, adoption of piling, chemical injection to solidification, sand-drain method should be recommended.
The bottom of trench shall be consolidated and leveled.

11-5 Previous Excavation

If the trench passes over a sewer or other previous excavation, the trench bottom should be confirmed to other specified standards by Authorities and sufficiently compacted to provide support equal to that of the native soil.

11-6 Drainage of Trench

Prior to pipe laying, any water remaining in the trench such as storm water or underground water should be removed with a sump pump. In this case, the pump should be placed in small pit provided to collect the water. If necessary, well point should be employed.

11-7 Pipe Laying

For jointing and convenient work performance, proper implements, tools and facilities should be provided. All pipes, fittings, valves and hydrants are laid along the trench on the opposite side from the excavated earth.

11-7-1 Lowering of pipes

All pipes should be carefully lowered into the trench by using crane, ropes or other suitable tools or equipment in such a manner as to prevent the body, coating and lining of water main materials. Under no circumstances shall water main materials be dropped or dumped into the trench.
Ductile iron pipes and fittings should be lifted or lowered by using wire rope or nylon sling. When using wire rope, cushion pads or rubber sleeves must be used as a cover to protect the outside coating of pipes and fittings. (See Fig. 11-1 and 11-2)

11-7-2 Examination of materials

All pipes and fittings should be carefully inspected for damage and other defects before installation.

11-7-3 Pipe ends
All lumps, blisters and excessive coating should be removed from the outside of spigot end and inside of socket at where rubber gasket will be set. These portions should be wiped clean and dry, and be free from dirt, sand, grit or any foreign materials before pipes and fittings are laid.

11-7-4 Pipe cleanliness
Foreign material should be prevented from entering the pipe and fittings while they are placed in the trench.

11-7-5 Pipe placement
As each pipe is placed in the trench, joint is assembled and pipe brought to correct line and grade. Pipe should be so placed that the manufacturer's mark on the socket face should come on the top. Pipe is then secured in place with proper backfill materials.

11-7-6 Pipe plug
While laying is not in progress, the open ends of pipes should be closed off by a watertight plug or other means. The plug should be fitted with means of venting. When practical, the plug should remain in place until the trench is pumped completely dry.
Care should be taken to prevent pipe floatation if the trench is filled with water.
Prior to removal of the plug or extending the line, or for any other reasons, air and/or water pressure in the pipeline should be released.

11-8 Valve Installation

11-8-1 Examination of valve
Prior to installation, valves should be inspected for opening direction, number of turns to open, easy operation, tightness of pressure-containing bolts and test plugs, cleanliness of valve ports and especially seating surfaces, handling damage, and cracks. Defective valves shall be replaced or held for inspection. Valves should be closed before being installed.

11-8-2 Placement
DN300 and larger valves should be provided with special support such as treated timbers, crushed stone or concrete pads, or laid on sufficiently compacted trench bottom so that pipes connected to the valve will not be required to bear the weight of the valve. Valves should be installed in closed position.

11-9 Backfilling

Backfilling shall be accomplished in accordance with the special laying conditions when such conditions are taken into the design of ductile iron pipe (see chapter 7).

11-9-1 Backfill materials
All backfill materials should be free from clinkers, ash, refuse, vegetable or organic materials, boulders, rocks, stones, frozen soil, or other material that is unsuitable. The excavated material may be used, provided that such material consists of sand, loam, clay, gravel, or other materials that are suitable for backfilling when the type of backfill material is not specified. From 0.3 m above the top of the pipe to the subgrade of the pavement, material containing stones up to 200 mm in largest dimension may be used unless otherwise specified.

11-9-2 Compaction

Backfill materials shall be fed in the trench carefully to avoid the movement and damage of the pipe. Generally special compaction is not necessary for ductile iron pipe. Backfill materials should be compacted to not cause the future settlement by earth pressure and traffic loads. In case of sand ground, water-binding will be effective.

When special backfill compaction procedures are required, they shall be accomplished in accordance with project specification or national or local regulations.

11-9-3 Partial backfilling during test

Newly installed pipelines are normally field-hydrostatic pressure tested after backfilling. When the test is carried out before the completion of backfilling, sufficient backfill material should be placed over the pipe barrel between the joints to prevent the movement of pipe. Due consideration should be given to restraining thrust forces during the test if the fittings are protected from thrust force by restrained joints.

11-9-4 Pipe floatation prevention

Groundwater or rainwater in the trench bottom may float the newly laid pipeline if pipes are not filled with water nor backfilled. To prevent this phenomenon, following measures are effective.

(1) Fill the pipes with water as soon as possible after installation.
(2) Install drain pumps in the trench.
(3) Backfill the pipes as soon as possible after installation.

Among above measures, (3) will be most reliable. The calculated minimum depth of the backfill above the pipe to prevent pipe floatation is shown in Table 11-2.

Minimum cover depth for pipe floatation prevention **Table 11-2**

DN	Buoyancy (kN/m)	Minimum cover depth (m)
80	0.074	-
100	0.107	-
150	0.223	-
200	0.380	0.02
250	0.578	0.06
300	0.818	0.06
350	1.100	0.10
400	1.417	0.12
450	1.774	0.16
500	2.180	0.19
600	3.105	0.23
700	4.195	0.31
800	5.460	0.38
900	6.878	0.53
1000	8.459	0.61
1100	10.221	0.68
1200	12.130	0.76
1400	16.462	0.89
1500	18.863	0.96
1600	21.428	1.04
1800	27.076	1.19
2000	33.384	1.35
2200	40.036	1.47
2400	46.531	1.59
2600	55.481	1.76

Note. Pipe is of Class K-9 of ISO 2531 and lined with cement mortar.

Chapter 12 Jointing

12-1 General

There are many types of joints for ductile iron pipes and fittings such as flexible type, restrained type, self-anchoring flexible type and flange type.
These joints except for the flange type have the following general features.

(1) Because of the "self-sealing effect" of the rubber gasket, joints have excellent water tightness.
(2) Pipe jointing work can be carried out in narrow trenches and even in places where a small amount of water exists.
(3) Pipe installation work is fast compared to other pipeline with welded joints, and pipe backfilling work can be carried out immediately after jointing.

12-2 Type of Joint

12-2-1 Flexible type joint

There are two flexible type joints, namely, push-on (T-type) and mechanical (K-type) joints. These joints allow angular deflection and expansion/contraction.

Push-on T-type joint (DN80 – DN600) Fig. 12-1

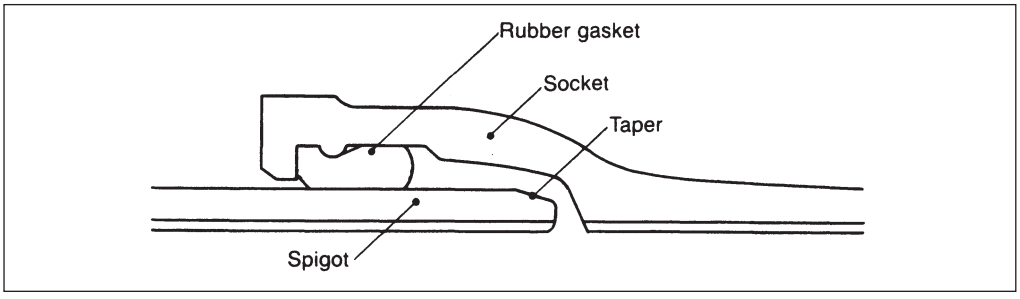

Push-on T-type joint (DN700 – DN2000) Fig.12-2

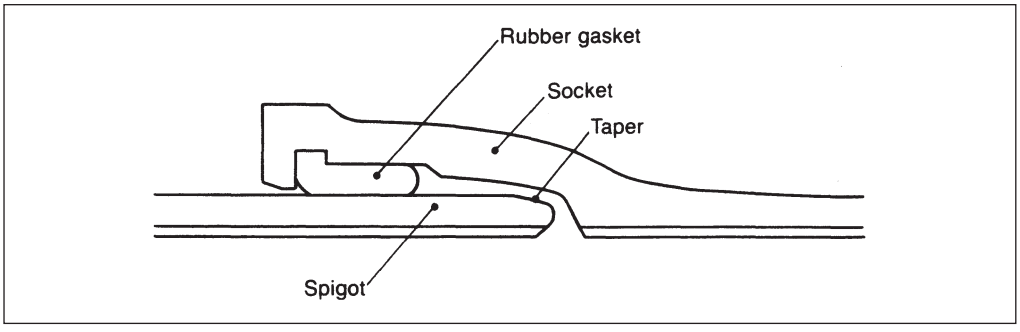

Mechanical K-type joint (DN80 – DN2600) Fig.12-3

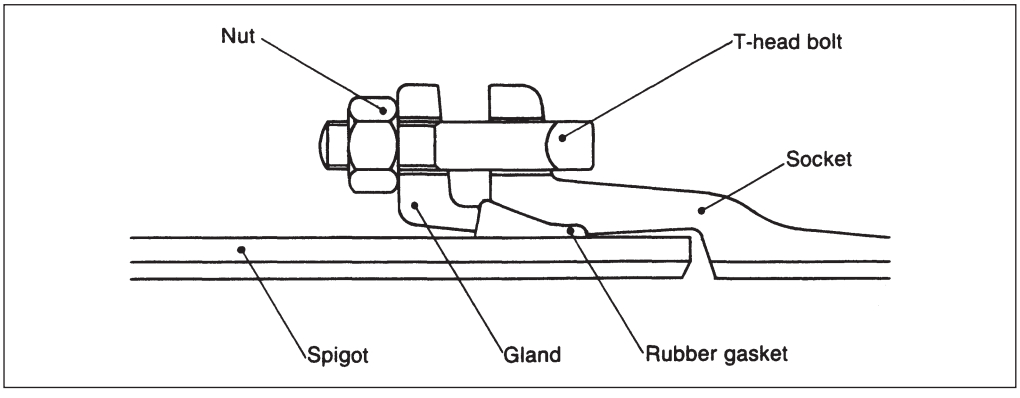

Push-on joint requires no accessories other than the rubber gasket. Push-on joint is assembled by pushing the spigot into the socket beyond the rubber gasket. The rubber gasket compressed radically by the spigot provides the joint excellent water tightness. Pipes with push-on joint are available from DN80 to DN2000 and fittings DN80 to DN1600.
Mechanical joint is assembled by compressing the rubber gasket in the stuffing-box of the socket through the gland by tightening the bolts and nuts. Pipes and fittings with mechanical joint are available from DN80 to DN2600.

12-2-2 Restrained type joint

There are several restrained type joints, namely, restrained push-on joint TF-type and restrained coupling (Kubolock-T) or retainer gland (Kubolock-K). These joints are normally used for the protection of bends or tees from thrust force in the pipeline. (See Chapter 8)
Pipes and fittings with restrained push-on joint TF-type are available from DN400 to DN1600.
Kubolock-T and Kubolock-K are attached to push-on T-type joint and mechanical K-type joint respectively to convert the flexible joint into the restrained one.
Both Kubolock-T and Kubolock-K are available to the pipes and fittings from DN80 to DN600. Kubolock-T and Kubolock-K may be supplied up to DN1200 upon request.

12-2-3 Self-anchoring flexible type joint

Self-anchoring flexible type push-on TS-type joint is used in such as soft ground where future pipeline settlement is expected. (See Chapter 14)
Pipes with TS-type joint are available from DN400 to DN1600.

Self-anchoring flexible TS-type joint Fig.12-4

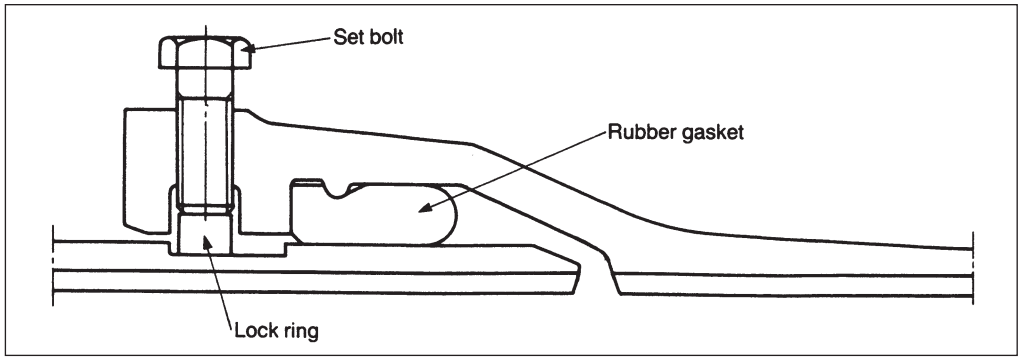

12-2-4 Flange type joint

Flanged joint is assembled by compressing rubber sheet gasket attached between two mating flanges by tightening bolts and nuts.
Fittings with flanged joint are available from DN80 to DN2600.
In case of large size flanges, special hydraulic units may be required to compress the rubber sheet gasket by huge bolt-tightening torque. In such case, special rubber gasket or other flange face than raised type will be recommended.
Kubota has GF-type flange for DN1800 and larger fittings. GF-type flange has a square-shaped groove on the flange face to set a special rubber gasket (Fig. 12-6).
Flanged joints combined RF-type with GF-type are assembled by compressing the special shaped rubber gasket with a bolting torque provided by a man-power even for a large size flanges.

Flanged joint (RF-type)

Fig.12-5

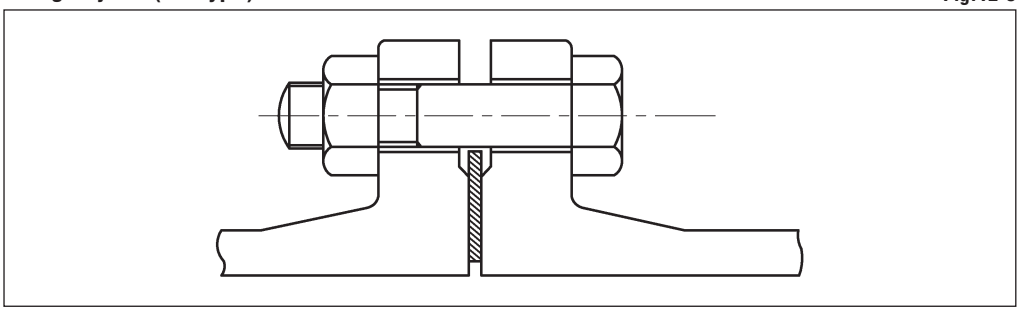

Flanged joint (RF-type and GF-type)

Fig.12-6

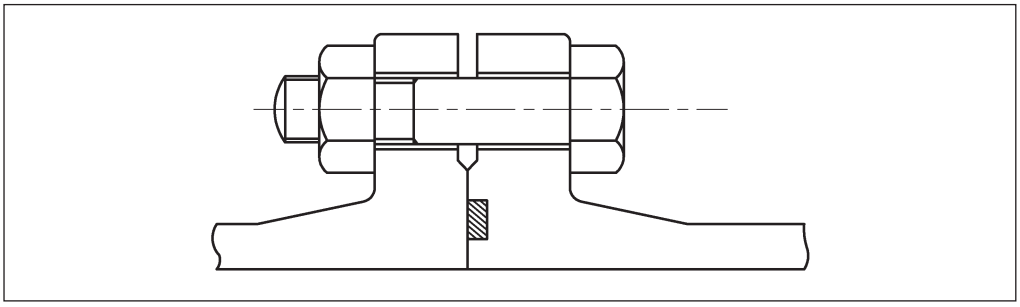

12-3 Jointing Procedure

12-3-1 Push-on joint

Assembling of push-on joint is very simple. Rubber gasket is placed on the inside of socket, then spigot of pipe to be jointed is inserted into the socket.
Jointing procedure is as follows:

(1) Clean the groove in the socket thoroughly. Set the rubber gasket while checking that it faces correct direction and is properly seated.
   1) Rubber gasket setting (Small to medium diameter size)
      Form the rubber gasket into heart- or guitar-shape and set it on the socket inside as shown in Fig. 12-7-2 and 12-8-2. Confirm that the rubber gasket is set in the groove all around the circumference of the socket.

DN80 - DN600

Fig. 12-7-1

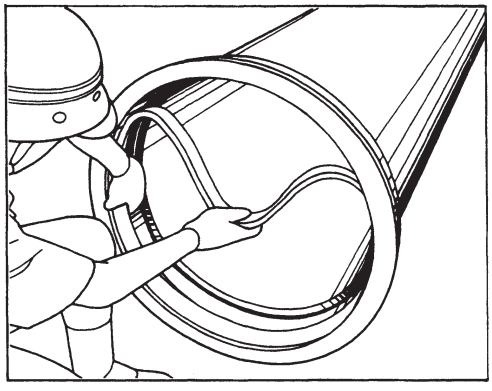

Fig. 12-7-2

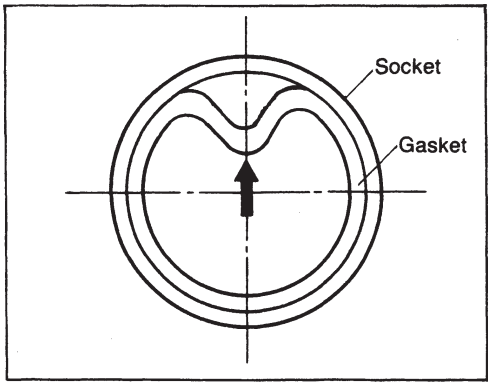

DN700 - DN900

Fig. 12-8-1

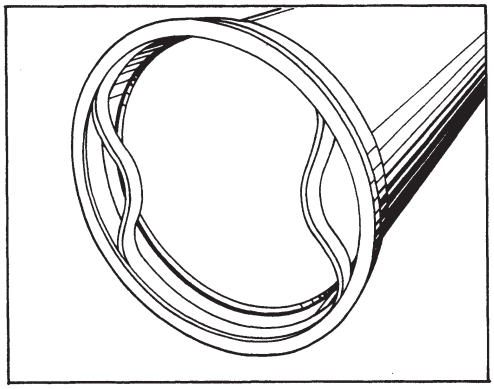

Fig. 12-8-2

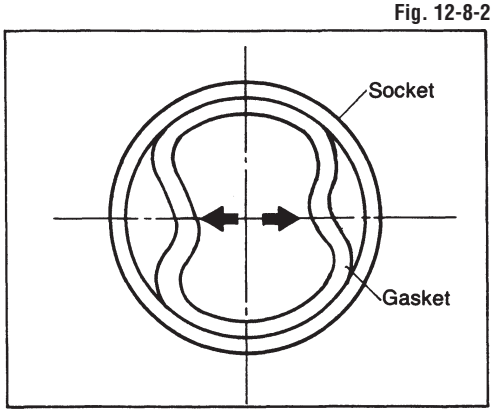

2) Rubber gasket setting (Large diameter size)
Align the white marks painted on the rubber gasket with the marks on the socket end face, then form the rubber gasket into flower-shape as shown in Fig. 12-9-2. Confirm that the rubber gasket is set in the groove all around the circumference of the socket.

DN1000 - DN2000

Fig. 12-9-1

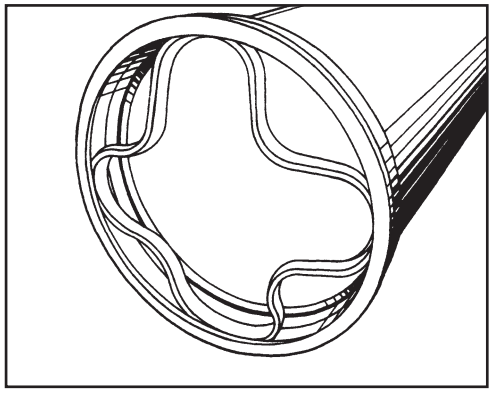

Fig. 12-9-2

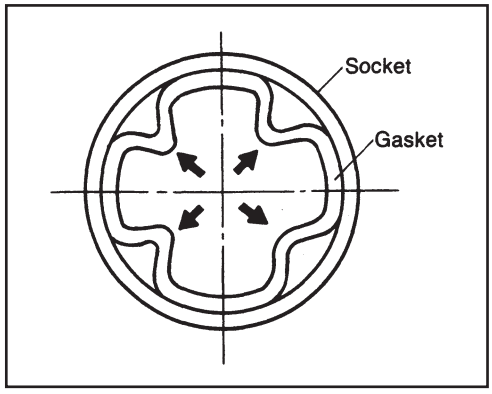

(2) After cleaning, remove dirt or foreign material from the spigot end, then apply lubricant to the spigot end and the rubber gasket in the socket.

Fig. 12-10-1

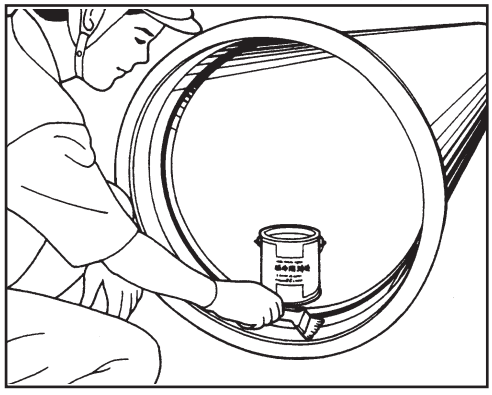

Fig. 12-10-2

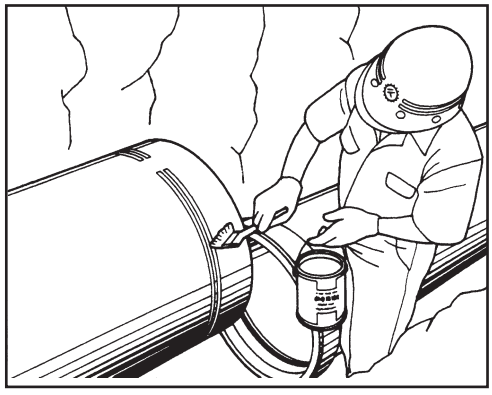

(3) Align the spigot to the socket of the pipes and insert the spigot end to the socket.

Fig. 12-11

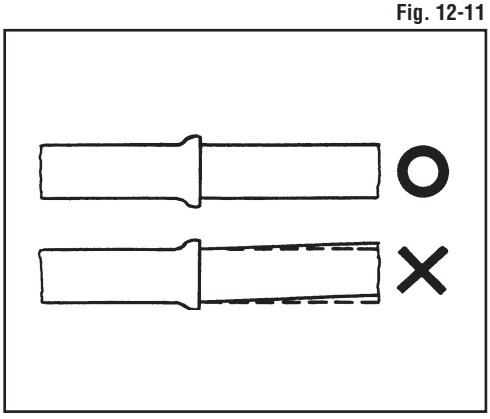

(4) Set the jointing tools. Use fork for DN150 and smaller pipe, one lever block for DN200 to DN600, two for DN700 to DN1200 and three for DN1400 to DN2000 pipes.

Fig. 12-12-1

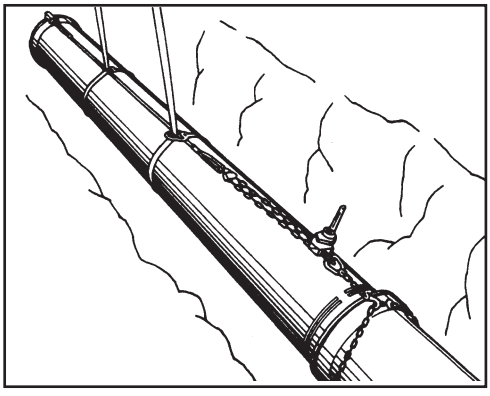

Fig. 12-12-2

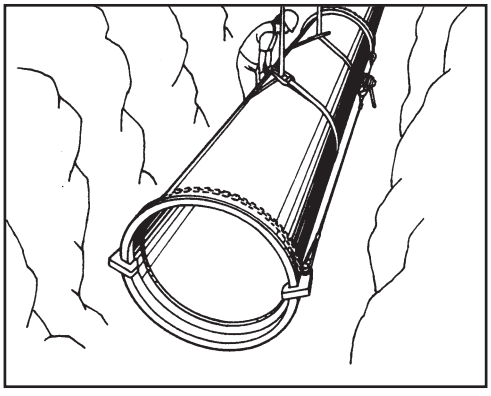

(5) Operate the jointing tools and pull the spigot end into the socket of the pipe. Keep the pipes straight during pulling.

Fig. 12-13-1

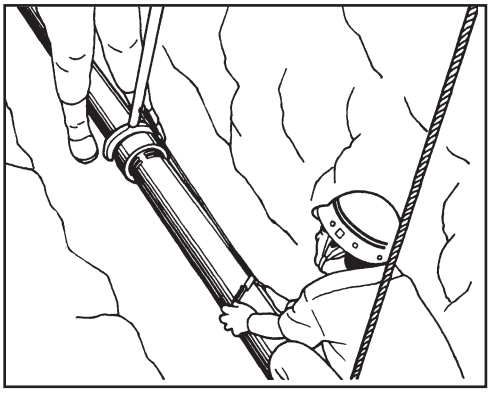

Fig. 12-13-2

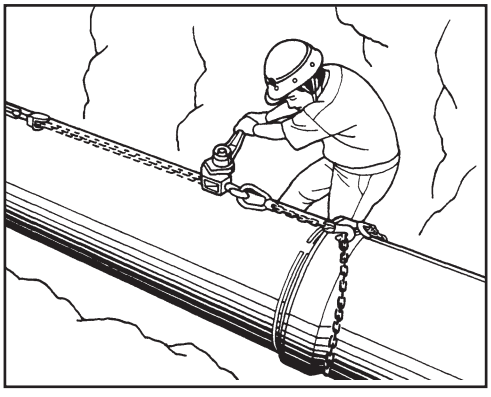

(6) After the white line painted on the spigot end comes to the socket end, confirm the proper position of the rubber gasket by using a feeler gauge all around the circumference of the pipe.

Fig. 12-14-1

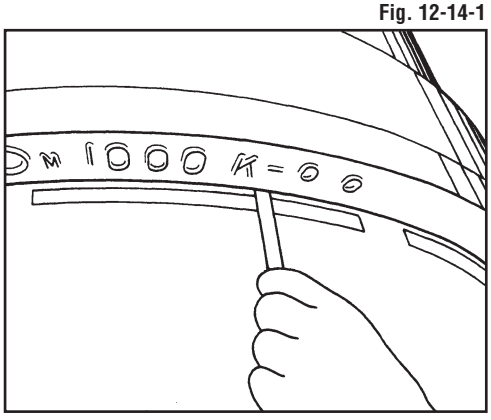

Fig. 12-14-2

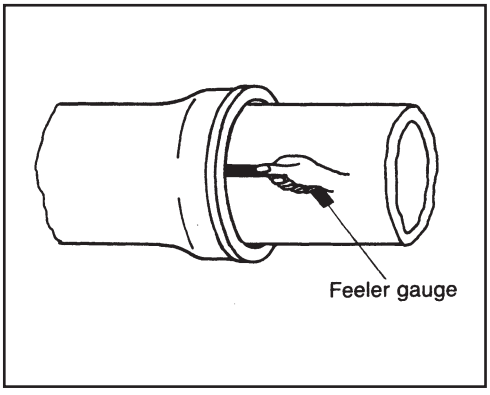

Fig. 12-14-3

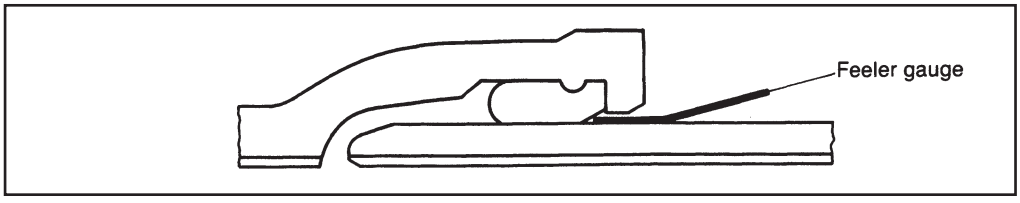

12-3-2 Mechanical joint

Mechanical joint also has excellent jointing workability. Jointing work consists of tightening bolts and nuts. Jointing procedure is as follows:

(1) Clean socket inside and spigot end. Apply lubricant to them and also to the inside of rubber gasket. Place the rubber gasket following to the gland on the spigot end while checking that they face correct direction.

Fig. 12-15-1

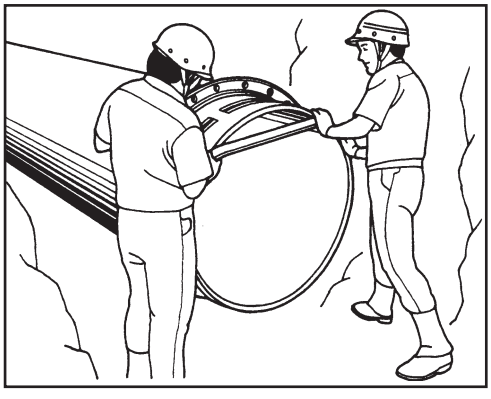

Fig. 12-15-2

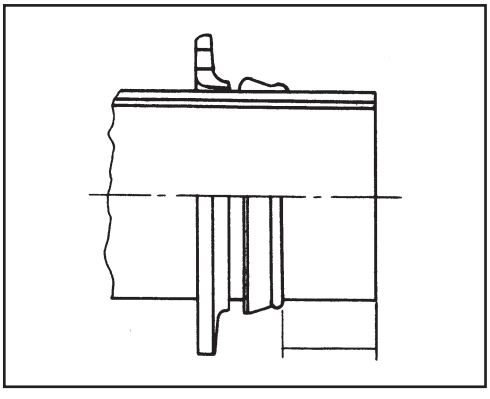

(2) Insert the spigot into the socket, then push the rubber gasket firmly and evenly into the socket Keep the joint straight during assembly.

Fig. 12-16

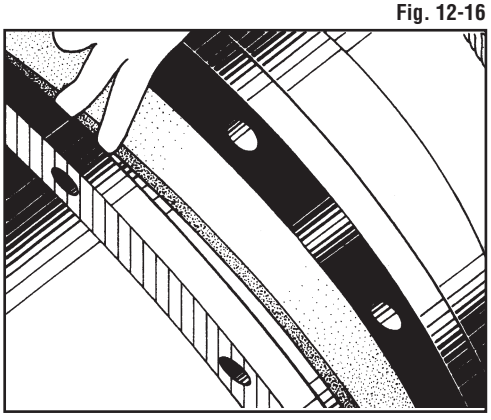

(3) Pull the gland toward the socket and push the rubber gasket. Attach T-head bolt and hand- tighten nuts.

Fig. 12-17

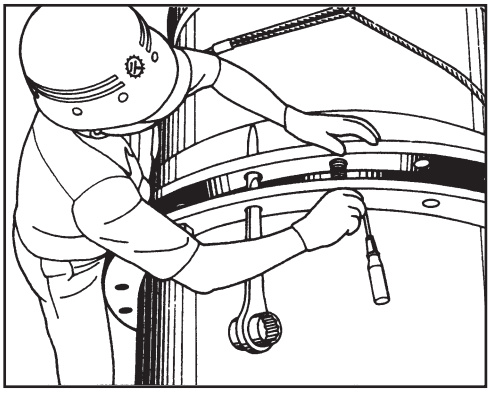

(4) Tighten the bolts to the normal range of bolting torque as indicated in Table 12-1 while at all times maintaining approximately the same distance between the gland and socket flange at all points around the socket. This can be accomplished by partially tightening the bolt at the bottom first, second the top, then the both sides, and finally remainings. Repeat this process until all bolts are within the appropriate range of torque. For large size pipes, five or more repetitions may be required.

Fig. 12-18

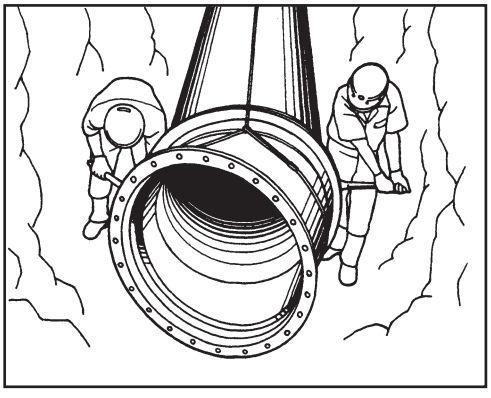

(5) Check tightness of all bolts and nuts. It is recommended to use torque wrench to check the bolting torque. The bolting torque is specified in Table 12-1.

Fig. 12-19

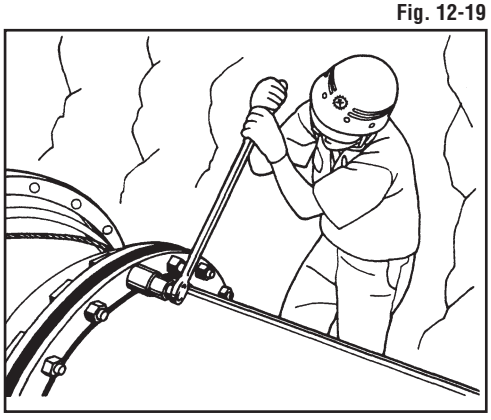

Bolting torque for mechanical joint

Table 12-1

DN	Bolt size	Torque (N-m)	Suggested length of wrench (m)
80	M16	60	0.15
100 - 600	M20	100	0.25
700, 800	M24	150	0.35
900 - 2600	M30	200	0.45

Note: If the specified torque cannot be achieved, do not force the bolts, instead, disassemble the joint and try to assemble it again.

12-3-3 Detailed instructions for jointing work

Booklets with more detailed instructions are available. Please contact us if necessary.

12-3-4 Flange joint

(1) The gasket face of flanges should be cleaned and rubber gasket should be attached to the flange face with adhesive paste or tape.

(2) Mate two flanges. Align bolt holes and insert the bolts, then hand-tighten nuts. Tighten the bolts to the normal range of bolting torque as indicated in Table 12-1 while at all times maintaining approximately the same distance between two flanges at all point around the flange.

(3) Check tightness of all bolts and nuts. The recommendable bolting torque is shown in Table 12-2.

Recommendable bolting torque for RF-type flange Table 12-2

DN	PN10		PN16	
	Bolt size	Torque (N-m)	Bolt size	Torque (N-m)
80	M16	70 - 90	M16	70 - 90
100	M16	70 - 90	M16	70 - 90
150	M20	120 – 160	M20	120 - 160
200	M20	120 – 160	M20	120 - 160
250	M20	120 – 160	M24	250 - 300
300	M20	120 – 160	M24	250 - 300
350	M20	120 – 160	M24	250 - 300
400	M24	250 – 300	M27	350 - 400
450	M24	250 – 300	M27	350 - 400
500	M24	250 – 300	M30	400 - 500
600	M27	350 – 400	M33	500 - 700
700	M27	350 – 400	M33	500 - 700
800	M30	400 – 500	M36	700 - 900
900	M30	400 – 500	M36	700 - 900
1000	M33	500 – 700	M39	700 - 1100
1100	M33	500 – 700	M39	800 - 1100
1200	M36	700 – 900	M45	1100 - 1500

Note: For the bolting torque of over DN1200 or PN25 flanges, please consult us.

12-4 Deflection of Joints

12-4-1 Deflection angle of joint

When pipeline is required to be deflected, it can be done by means of deflecting the pipeline at joints within their allowable angular deflection shown in Table 12-3. These angles are allowable value at pipe laying therefore joints should not be exceeded. For design purpose, deflection should be limited to 50-80 percent of the allowable angle.

Allowable joint deflection angle Table 12-3

DN	Allowable deflection angle	
	Push-on T-type joint	Mechanical K-type joint
80 to 200	5°	5°
250	4°	5°
300	4°	5°
350	4°	4° 50’
400	3° 30’	4° 10’
450	3°	3° 50’
500	3°	3° 20’
600	3°	2° 50’
700	2° 30’	2° 30’
800	2° 30’	2° 10’
900	2° 30’	2°
1000	2°	1° 50’
1100	2°	1° 40’
1200 and larger	2°	1° 30’

12-4-2 Procedure of pipe jointing in deflection

(1) Make the trench wider appropriate for the amount of deflection.
(2) Assemble the joint in a straight line, then deflect the joint up to the allowable angle shown in Table 12-3.
(3) In case of push-on joint, whole two white lines on the spigot should not be visible all around the pipe body after deflected.

In case of mechanical joint, bolts shall be tightened slightly after deflected, then completely tightened to the specified bolting torque.

12-4-3 Laying of pipes in curve

It is often necessary to deviate the pipeline from a straight line when following the curvature of streets and roads.
When the deviation angle is small or when the deviation angle is large but the radius of curvature is large, both push-on and mechanical joint pipes may lend themselves readily to deflection of pipelines at the joints within their allowable deflection angle. (See Fig. 12-20)
When the deviation angle is large and the radius of curvature is small, bends shall be used. The standard angle of the bend is 90˚, 45˚, 22.5˚ and 11.25˚. Pipeline route will be decided by the combination of bend(s) and joint deflection.

Fig. 12-20

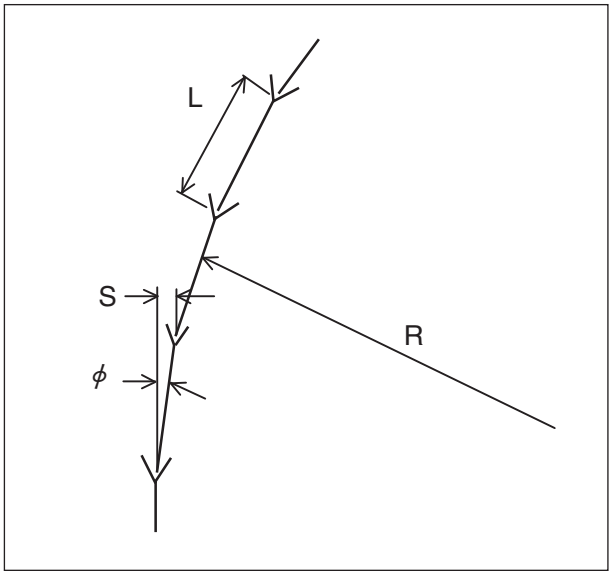

Offset: S

$$S = L \sin\phi$$

Where, L : Length of pipe (m)
ϕ : Deflection angle (degree)

Radius of curve: R

$$R = \frac{L}{2\tan(\phi/2)}$$

Table 12-4

DN	Allowable angular deflection	Maximum offset S (m)				Radius of curve R (m)			
		Pipe length				Pipe length			
		4 m	5 m	6 m	9 m	4 m	5 m	6 m	9 m
80	5°00'	0.35	—	—	—	46	—	—	—
100	5°00'	0.35	—	0.52	—	46	—	69	—
150	5°00'	—	0.44	0.52	—	—	57	69	—
200	5°00'	—	0.44	0.52	—	—	57	69	—
250	4°00'	—	0.35	0.42	—	—	72	86	—
300	4°00'	—	—	0.42	—	—	—	86	—
350	4°00'	—	—	0.42	—	—	—	86	—
400	3°30'	—	—	0.37	—	—	—	98	—
450	3°00'	—	—	0.31	—	—	—	115	—
500	3°00'	—	—	0.31	—	—	—	115	—
600	3°00'	—	—	0.31	0.47	—	—	115	172
700	2°30'	—	—	0.26	0.39	—	—	137	206
800	2°30'	—	—	0.26	0.39	—	—	137	206
900	2°00'	—	—	0.21	0.31	—	—	172	258
1000	2°00'	—	—	0.21	0.31	—	—	172	258
1100	2°00'	—	—	0.21	0.31	—	—	172	258
1200	2°00'	—	—	0.21	0.31	—	—	172	258
1400	2°00'	—	—	0.21	0.31	—	—	172	258
1500	2°00'	—	—	0.21	0.31	—	—	172	258
1600	2°00'	—	—	0.21	0.31	—	—	172	258
1800	2°00'	—	—	0.21	—	—	—	172	—
2000	2°00'	—	0.17	—	—	—	143	—	—

Table 12-5

DN	Allowable angular deflection	Maximum offset S (m)			Radius of curve R (m)		
		Pipe length			Pipe length		
		4 m	5 m	6 m	4 m	5 m	6 m
80	5°00'	0.35	—	—	46	—	—
100	5°00'	0.35	—	—	46	—	—
150	5°00'	—	0.44	—	—	57	—
200	5°00'	—	0.44	—	—	57	—
250	4°00'	—	0.44	—	—	57	—
300	5°00'	—	—	0.52	—	—	69
350	4°50'	—	—	0.51	—	—	71
400	4°10'	—	—	0.44	—	—	82
450	3°50'	—	—	0.40	—	—	90
500	3°20'	—	—	0.35	—	—	103
600	2°50'	—	—	0.30	—	—	121
700	2°30'	—	—	0.26	—	—	137
800	2°10'	—	—	0.23	—	—	159
900	2°00'	—	—	0.21	—	—	172
1000	1°50'	—	—	0.19	—	—	187
1100	1°40'	—	—	0.17	—	—	206
1200	1°30'	—	—	0.16	—	—	229
1400	1°30'	—	—	0.16	—	—	229
1500	1°30'	—	—	0.16	—	—	229
1600	1°30'	—	—	0.16	—	—	229
1800	1°30'	—	—	0.16	—	—	229
2000	1°30'	—	0.13	—	—	191	—
2100	1°30'	0.10	0.13	—	153	191	—
2200	1°30'	0.10	0.13	—	153	191	—
2400	1°30'	0.10	—	—	153	—	—
2600	1°30'	0.10	—	—	153	—	—

12-5 Connection with Other Kinds of Pipe

When ductile iron pipe is to be connected to other kinds of pipes, specially designed change collars, change spigots or stepped couplings are employed to accommodate the change in diameter.
In case of steel pipe, spigot ring, which adjusts the outside diameter, is commonly welded on the spigot end.

12-5-1 Change collars

Fig. 12-21

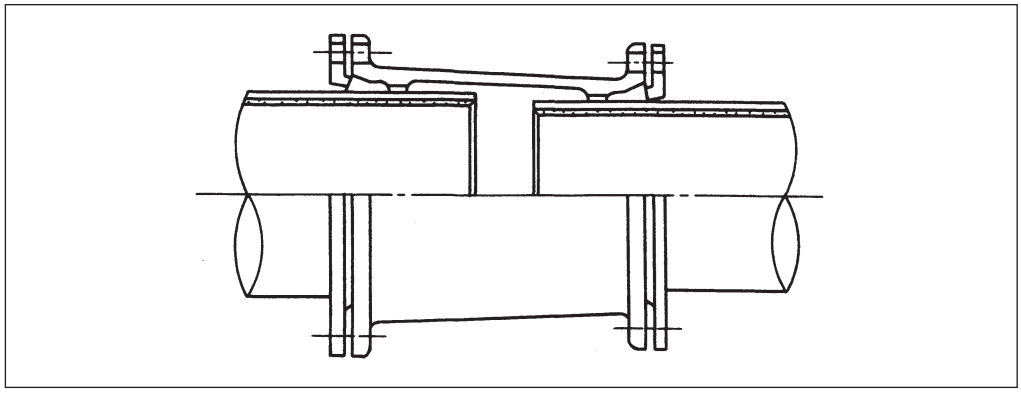

Where there is a possibility of movement of change collar by internal pressure, it is recommended to anchor the change collar, especially for size combinations above DN200.

12-5-2 Change-spigot piece

Fig. 12-22

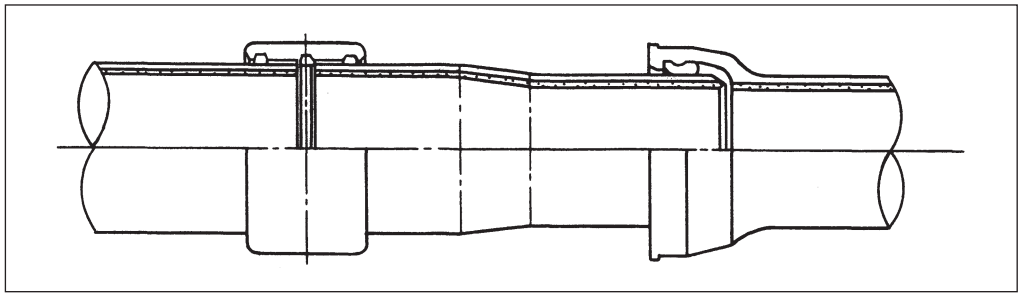

Ductile iron change-spigot pieces have spigots for connection with ductile iron pipe socket at one end and with other kinds of pipe at the other side.
Change-spigot pieces are suitable for use where significant thrust force due to the difference of pipe diameter is encountered. However, anchoring should be considered where the smaller spigot end is connected with collar and there is an appreciable gap between the spigot ends in the collar.

12-5-3 Stepped coupling

Anchoring may be required.

Fig. 12-23

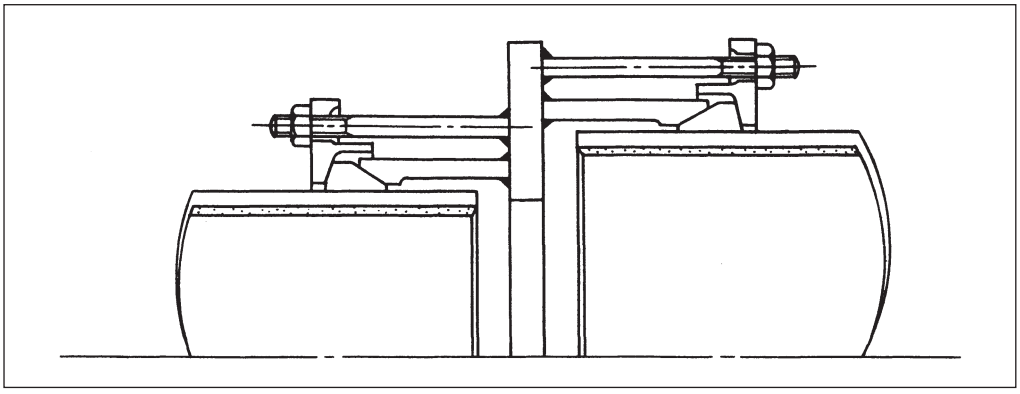

12-5-4 Double flanged change piece

Fig. 12-24

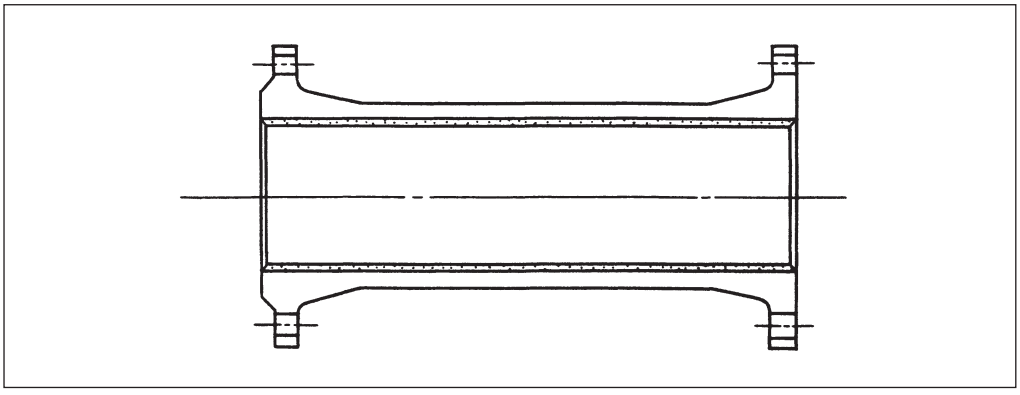

12-5-5 Note

When change collars, change-spigot pieces, stepped couplings on double flanged change pieces are ordered, please specify clearly the dimensions of the pipes and/or flanges to be connected with ductile iron pipes.

12-6 Rubber Gasket

There are many materials of rubber gasket for ductile iron pipes such as SBR (Styrene Butadiene Rubber), NBR (Acrylonitrile Butadiene Rubber) or EPDM (Ethylene Propylene Rubber). General applications of these rubbers are shown in Table 12-6.
Kubota's standard rubber gasket is of SBR.

General applications of rubbers

Table 12-6

Rubber	Usage	Maximum service temperature
SBR	Potable water, sea water, sewage	60℃
NBR	Town gas, chemicals	60℃
EPDM	Potable water, sea water, sewage, hot water	80℃

Chapter 13 Field Hydrostatic Test

13-1 General

A newly installed pipeline may be tested to check the reliability of its performance before being brought into service.
Field hydrostatic test for ductile iron pipeline is specified in ISO 10802.

13-2 Flow Chart of Hydrostatic Test

The flow chart of the field hydrostatic test is shown below.

Flow chart of field hydrostatic test Fig. 13-1

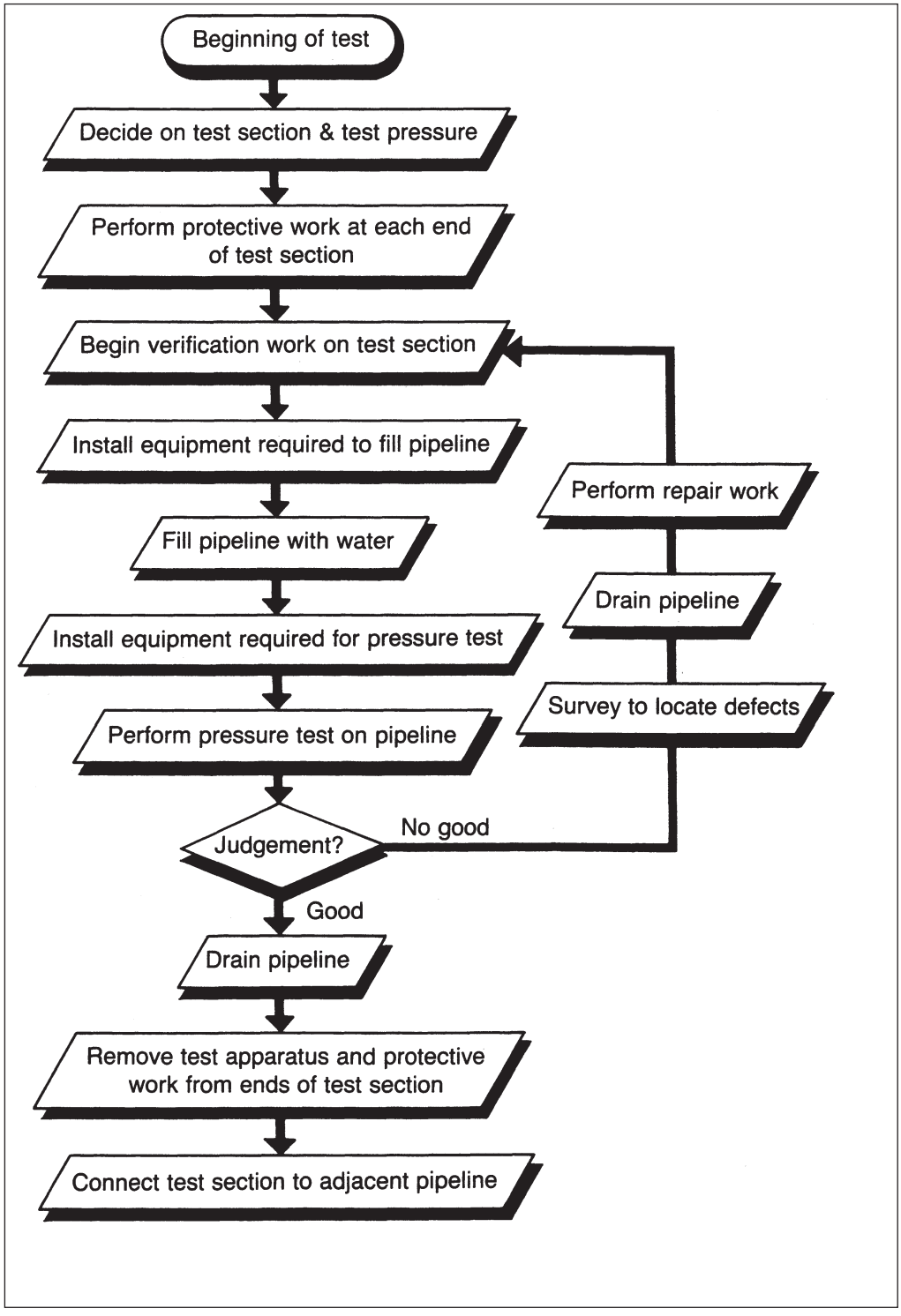

13-3 Details of Each Step

13-3-1 Decision of test section

The test section should be decided on after considering piping conditions and site situations, for example, ups and downs of pipeline, position of stop valves and air relief valves, space for testing, availability of water for the test, numbers of joints, and other factors. While the test section is being determined, the position of the valves and valve chambers should be considered, because they may be useful as terminal points for the ends of the test section as shown in Fig. 13-2.

Example of terminal point for the end of test section **Fig. 13-2**

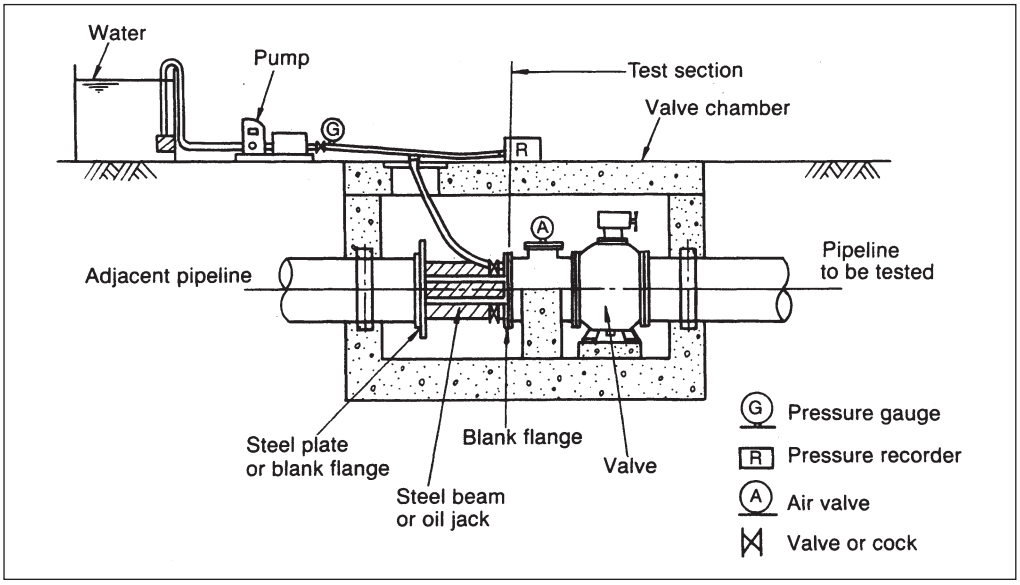

cf. ISO 10802, Sec. 4.1

4.1.2 For pressure pipelines, the length of the test sections shall not exceed 1500 m unless otherwise specified.

4.1.3 For non-pressure pipelines, the test section is usually the total length between consecutive manholes or inspection points. If special arrangements are made to enable testing over only part of length between manholes and inspection points, then the length of the test section shall not exceed 1000 m unless otherwise specified.

13-3-2 Decision of test pressure

The test pressure should be determined referring to international standard or national standard.

cf. ISO 10802, Sec. 5.1.1.3 (for pressure pipeline) and 5.2.2 (for non-pressure pipeline)

5.1.1.3 The test pressure at the lowest point of the test section shall be not less than the limit specified in a) or b), whichever is greater.

a) for working pressure less than or equal to 10 bar: 1.5 times the working pressure;
for working pressure greater than 10 bar: the working pressure plus 5 bar;

b) the maximum working pressure
The test pressure shall not exceed
- the maximum test pressure specified in the standards applicable to pipes, fittings, flanges and accessories, or
- the design pressure of the restraining or anchoring devices.

5.1.1.4 The test pressure at the highest point of the test section shall not be less than the working pressure at this point.

5.2.2 Unless maximum water tightness is essential, the test pressure shall not exceed;
0.4 bar at the crown of the pipe adjoining the upstream manhole,
1 bar at the crown of the pipe adjoining the downstream manhole, unless otherwise specified.

5.2.3 When maximum water tightness is essential, for instance owing to the presence of a high water table, springs or wells, a test pressure of up to 5 bar may be specified.

13-3-3 Thrust protection for the ends of test section

(1) Use of valve chamber

If valve chamber has enough capacity to install the equipment and apparatus required for the pressure test, it would be simple to carry out the pressure test inside it since the valve and valve chamber are designed to be able to resist the thrust force at valve closing.

An example of thrust protection method using a valve chamber is shown in Fig. 13-3.

Note: Closed gate or butterfly valves should not be subjected to rated pressure from water coming from the counter-flow direction.

Example of thrust protection in valve chamber **Fig. 13-3**

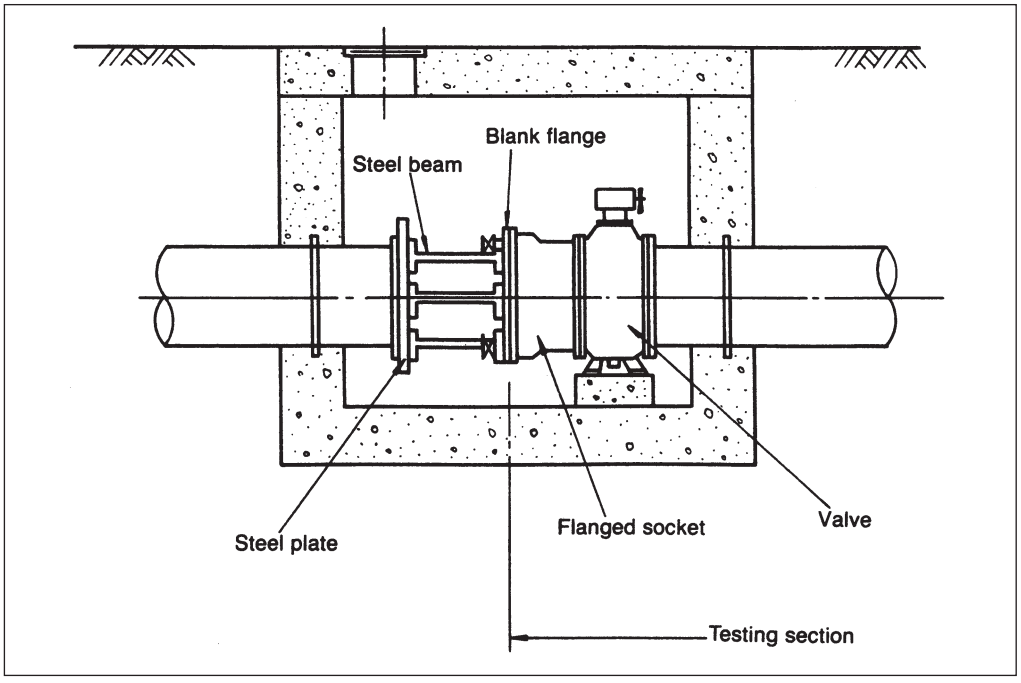

(2) Other thrust protection
An example of the thrust protection method other than that in valve chamber is shown in Fig. 13-4.

Example of thrust protection **Fig. 13-4**

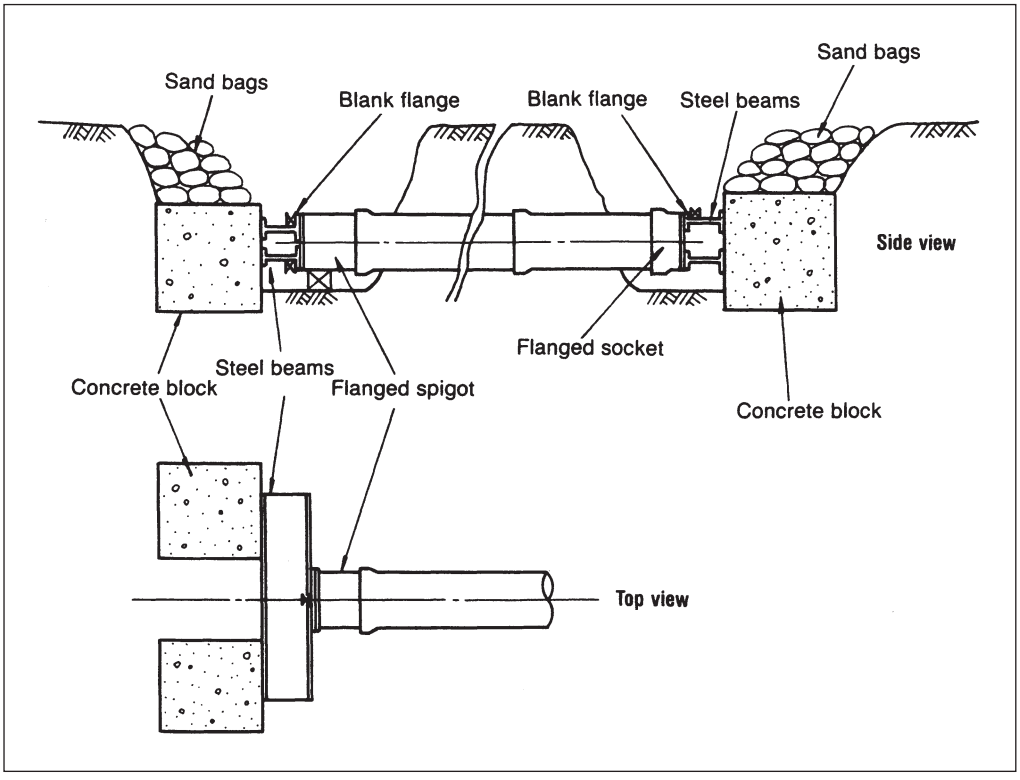

For low pressure or small diameter pipeline, portable steel plate with reinforced beams or wooden timbers can be used instead of concrete blocks as shown in Fig. 13-5.
Care should be taken to the strength of the thrust protection.

Example of thrust protection **Fig. 13-5**

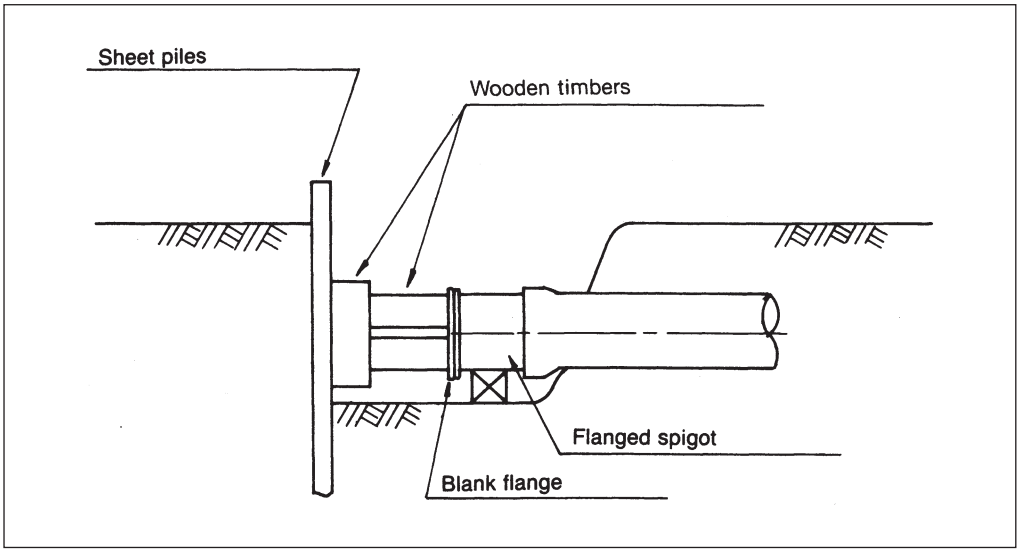

13-3-4 Water filling

Water filling shall be carried out slowly verifying that air is being released from the pipeline. It is very important to make sure that air is actually being released during the water filling. Insufficient ventilation will lead the test to fail and compressed air by the water pressure is very dangerous.
If leakage is found during the water filling, leaked point should be repaired immediately.
The pipeline should be left in the water-filled condition for at least 24 hours to stabilize the pipeline.

cf. ISO 10802, Sec. 4.4
Filling should normally be carried out at the lowest point of the section to be tested and at a rate slow enough to ensure that all air is evacuated. The pipeline shall have air-venting facilities at all high points. As a guide, the flow-rate during filling should not exceed 10 % of the design working flow-rate. Cement mortar lined pipelines require a period of time after filling (depending on site conditions) for absorption by the lining to take place.

13-3-5 Installation of test equipment

The necessary equipment for the pressure testing work will be as follows.

- Pressure pump (with engine or motor) ·····1 set
- Pressure gauge ·····1 set
- Pressure recorder ·····1 set
- Suction hose ·····necessary length
- Connection hose ·····necessary length
- Overflow hose ·····necessary length
- Water tank and water meter ·····1 set
- Connection pieces (including valves or cocks) ·····1 set

An example of the layout of test equipment is shown in Fig. 13-6.

Example of layout of test equipment **Fig. 13-6**

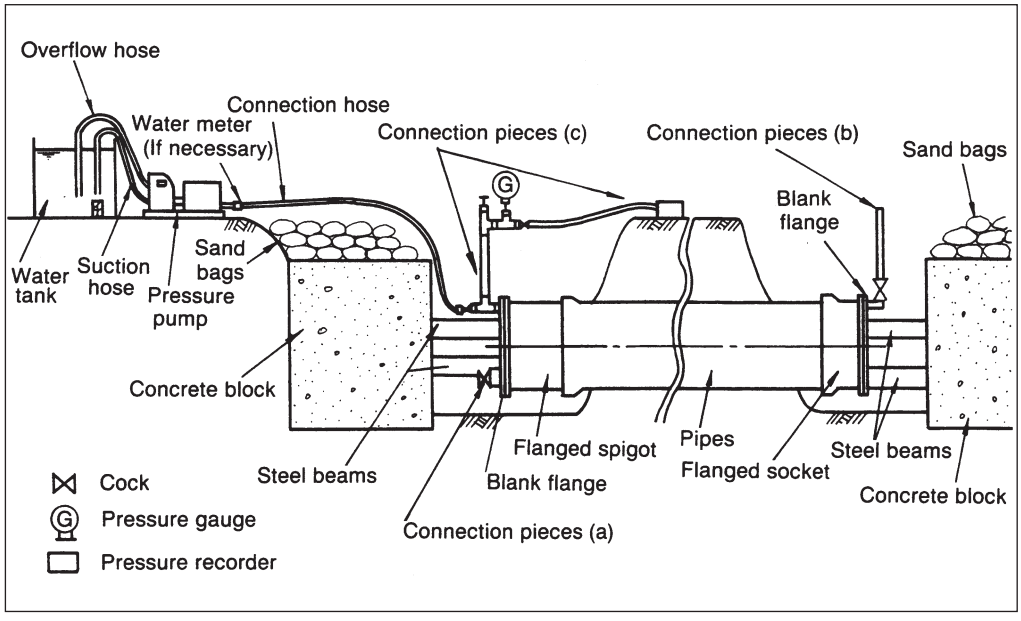

13-3-6 Testing

The pressure test should be carried out referring to the international standard or national standard.

cf. ISO 10802, Sec. 5

5.1 Pressure pipeline

5.1.1 Preliminary operations

After filling and before application of the test pressure, maintain the test section at the working pressure for a sufficient period of time for it to stabilize with respect to line movement under pressure, water absorption by the lining, etc.

5.1.2.1 Falling pressure test

Maintain the test pressure constant to±0.1 bar, by pumping if necessary, for a period of at least 1 h. Then disconnect the pump and allow no further water to enter the test section for a period of at least

1 h for DN≦600, 3 h for 600＜DN≦1400, 6 h for DN＞1400

At the end of this test period, measure the pressure in the test section. Determine the water loss either by measuring (to an accuracy of ±5 %) the amount of water it is necessary to pump into the test section to restore the test pressure to within ±0.1 bar, or by restoring the test pressure and measuring the amount of water it is necessary to draw off the test section to produce an equivalent pressure drop.

5.1.2.2 Constant pressure test

Maintain the test pressure constant to ±0.1 bar, by pumping if necessary, for a period of at least 1 h. Then maintain the test pressure constant (to ±0.1 bar) in the test section by pumping for at least

1 h for DN≦600, 3 h for 600＜DN≦1400, 6 h for DN＞1400

and measure (to an accuracy of ±5 %) the amount of water used to do so.

5.2 Non-pressure pipeline

5.2.1 After filling and before application of the test pressure, leave the test section for a sufficient period of time to allow water absorption by the lining.

5.2.4 After a test period of 2 h, determine the water loss by measuring the quantity of water it is necessary to add to restore the initial level in the upstream manhole.

13-3-7 Judgement

The judgement for the pressure test should be done referring to the international standard or national standard.

cf. ISO 10802, Sec. 6

6.1 Pressure pipelines

The water loss shall not exceed 0.001 litre/hour/kilometer of pipeline/millimetre of nominal size/bar of static pressure (average head applied to the test section).

6.2 Non-pressure pipelines

The water loss shall not exceed 0.1 litre/kilometer of pipeline/millimetre of nominal size. However, when a test pressure in excess of 1 bar is specified, the acceptance criterion is that of pressure pipelines.

13-3-8 Drainage

After the completion of the test, water should be drained from the pipeline. If the adjacent pipeline section is to be tested, the water may be available for the next test.

13-3-9 Removal of thrust protection

Thrust protections at the ends of the test section should be removed when the tested pipeline is to be connected to adjacent pipeline. However, when the adjacent pipeline will be tested these thrust protections may be available for it.

13-3-10 Connection to adjacent pipeline

After the adjacent pipeline has been tested, the test section should be connected to it. Examples of the connection are shown below.

Example of connection at valve chamber Fig. 13-7

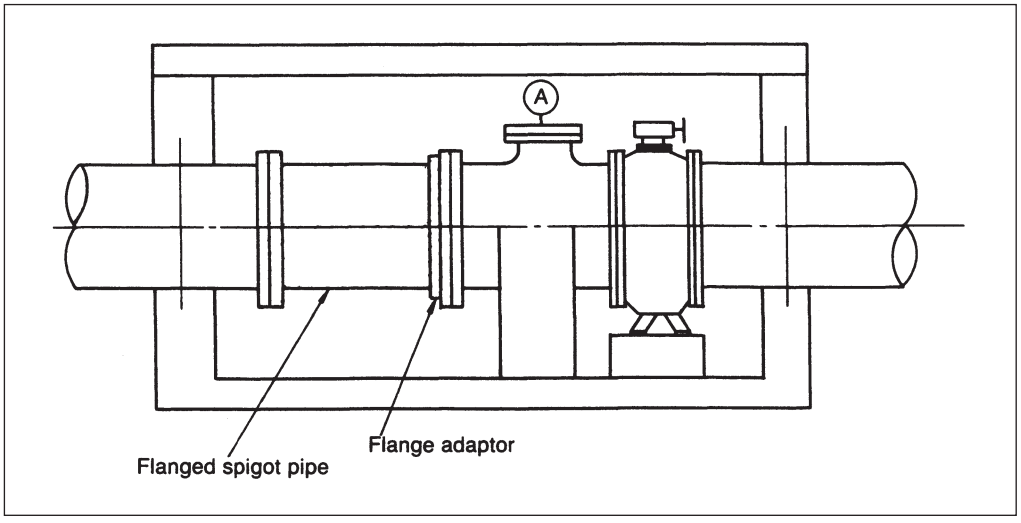

Example of connection Fig. 13-8

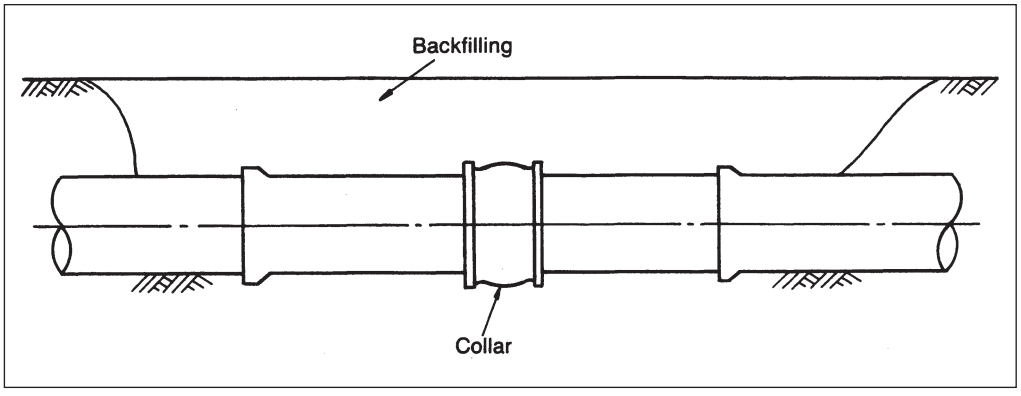

Chapter 14 Piping in Soft Ground

14-1 General

When pipes are laid in extremely soft ground consisting of hydrous and porous soil or in reclaimed land, special care should be taken to minimize the effect of ground movement on the pipeline.
Generally, soft ground is prone to subside for various reasons, for example, consolidation caused by pumping out underground water, banking for road-widening, loads and vibrations of vehicles, and effects of other constructions.
Therefore, pipelines to be installed in soft ground are required to be able to adapt to ground movement.

Sectional view of typical strata of soft ground **Fig. 14-1**

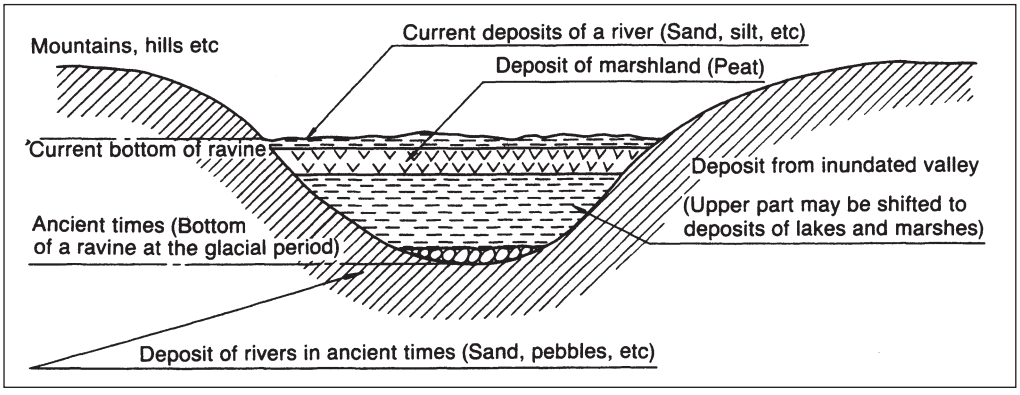

14-2 Investigation

Ground studies on the planned pipeline route should be made well in advance. The investigation of properties in each stratum should be made vertically to obtain samples by boring, to carry out soil tests, to measure N-values, etc.
Horizontally, it is desirable to set up test points taking the followings into consideration;

1) geographical features and formation process of soft ground,
2) long intervals where the stratum of the ground is equal, and
3) short intervals in irregular places, for example at the transitional point between solid ground and soft ground

It is also very effective to refer to the soil study results of previous construction work carried out in the same vicinity.

14-3 Calculation of Settlement Amount

The assumed amount of settlement at each point of the planned pipeline route should be checked on the basis of soil investigation results.
There are three calculation formulas for the settlement.

$$\Delta = \frac{e_o - e}{1 + e_o} H$$

$$\Delta = mv \Delta P H$$

$$\Delta = \frac{C_c}{1 + e_o} H \log \frac{P + \Delta P}{P}$$

Where, Δ : Amount of settlement due to consolidation (m)
e_o : Initial void ratio of undisturbed ground
e : Void ratio after loading
H : Thickness of strata to be consolidated (m)
mv : Volume change of soil (coefficient of volume compressibility) (m^2/kN)
C_c : Compression index of soil
P : Preceding load of undisturbed soil (kN/m^2)
ΔP : Increased load (kN/m^2)

$$\Delta P = I_\sigma \Delta W$$

I_σ : Influence value by depth
ΔW : Increased load (kN/m^2)

The following is an example of calculation used to estimate the amount of settlement when pipe is laid in soft ground.
(1) Conditions
Pipe: DN1000 ductile iron pipe, Class K-9
Ground: Soft ground (unit weight of soil γ = 10 kN/m^3)
The value of mv at each layer is shown in Fig. 14-2.
Excavation: Width 2.2 m, earth cover depth: 1.5 m
Backfilling: with sand (unit weight γ = 18 kN/m^3)

Conditions of the calculation Fig. 14-2

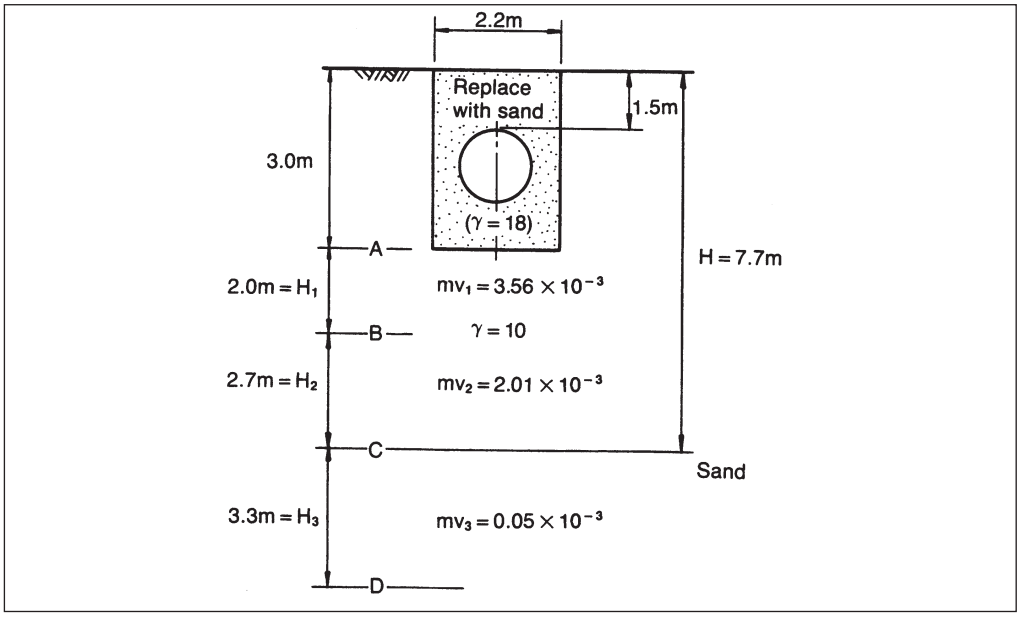

(2) Calculations

1) Weight of excavated soil
$2.2 \times 3.0 \times 10 = 66$ kN/m

2) Weight of backfilling soil
$(2.2 \times 3.0 - \pi/4 \times 1.048^2) \times 18 = 103.3$ kN/m

3) Weight of pipe (including cement mortar lining)
4.2 kN/m

4) Weight of water in pipe
$\pi/4 \times 1.0^2 \times 10 = 7.9$ kN/m

5) Increased load ΔW at the face A
2) + 3) + 4) – 1) = 49.4 kN/m

6) Increased pressure on the face A
$49.4/2.2 = 22.5$ kN/m^2

7) Amount of settlement between A and B
$3.56 \times 10^{-3} \times 22.5 \times 2 = 0.160$ m

8) Amount of settlement between B and C
$2.01 \times 10^{-3} \times 0.70 \times 22.5 \times 2.7 = 0.085$ m

9) Amount of settlement between C and D
$0.05 \times 10^{-3} \times 0.38 \times 22.5 \times 3.3 = 0.0014$ m

10) Total amount of settlement
7) + 8) + 9) = 0.25 m

Assumed settlement is approximately 0.25m. Piping design in the horizontal direction is made based on the calculation results of the assumed settlement amount at each point.

14-4 Straight Part of Pipeline

14-4-1 Even settlement

There will be no particular problem if each point subsides almost equally even though the settling amount is large. Because all pipes subside uniformly, pipes are not subject to mutual deflection or expansion-contraction. If the settlement is uneven to some extent, but is not large enough to be called “uneven settlement”, rational design can still be devised because the push-on or mechanical joint of ductile iron pipe is flexible and adaptable to a certain extent without generating stress on the pipe body, as shown in Fig. 14-3 and 14-4.

Deflection of joint Fig. 14-3

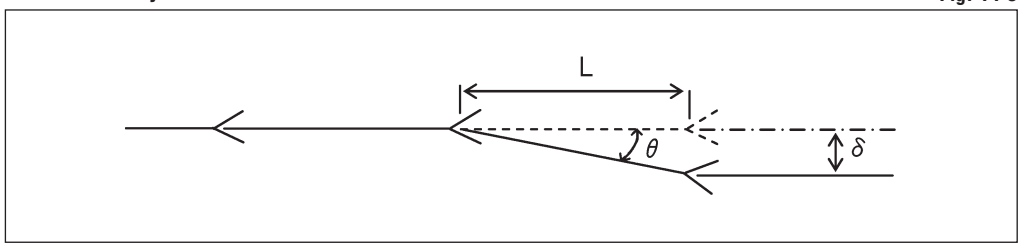

$$\delta = L \sin\theta$$

Where, δ : Amount of deflection
L : Length of pipe
θ : Deflection angle of joint (See Table 12-3)

Note. As for Amount of deflection δ and deflection angle θ of the joints, see Table 12-4 and 12-5.

Adaptability of flexible joint to pipe settlement Fig. 14-4

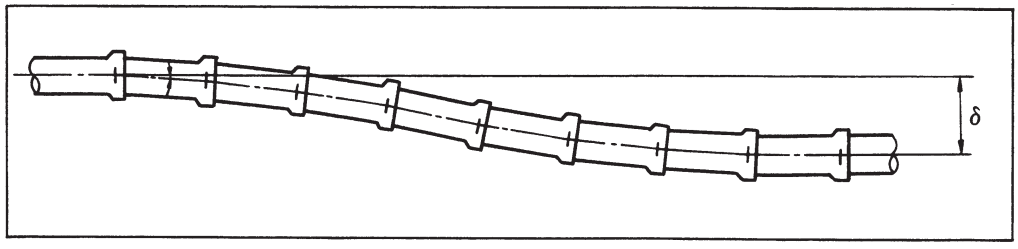

$$\delta = L(2\tan\theta+2\tan2\theta+2\tan3\theta+\cdots+2\tan\frac{n-1}{2}\theta+\tan\frac{n+1}{2}\theta)$$

Where, n : Number of pipes to the maximum settlement point (odd number)

An example of the amount of pipeline settlement by successive joint deflection on 90m long pipeline by 6m long pipe is shown in Table 14-1.

Example of adaptable pipeline settlement (6m long pipe, 90m long pipeline) Table 14-1

Joint deflection angle θ (degree)	0.5	1.0	1.5	2.0
Maximum settlement δ (m)	0.84	1.68	2.52	3.36

The maximum expansion of push-on joint and mechanical joint is shown in Table 14-2 and Fig. 14-5.

Maximum expansion of joints

Table 14-2

DN	Maximum joint expansion X (mm)	
	Push-on T-type joint	Mechanica K-type joint
80	32	40
100	33	40
150	39	50
200	42	50
250	42	50
300	50	64
350	56	64
400	56	64
450	56	64
500	61	64
600	66	64
700	64	64
800	69	64
900	84	64
1000	82	72
1100	97	72
1200	112	72
1400	126	77
1500	134	82
1600	147	85
1800	162	95
2000	182	105
2100	—	110
2200	—	115
2400	—	125
2600	—	141

Fig. 14-5

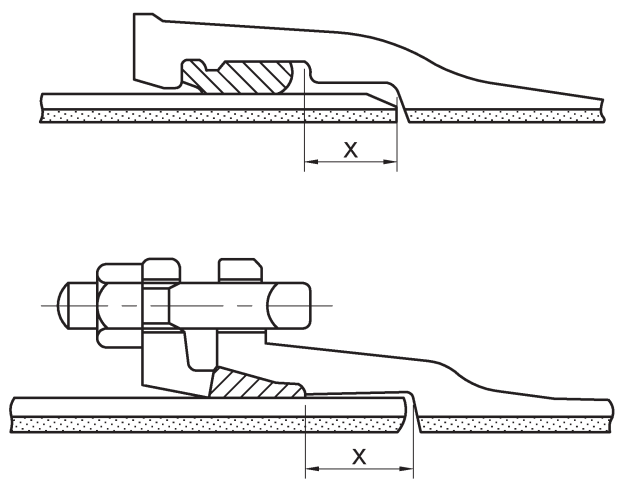

X: Maximum expansion value

14-4-2 Uneven settlement

Settlement differences of pipeline will occur;
1) in areas that have a variety of thickness in lower consolidation strata,
2) at the boundary of structures which do not subside and soft ground, and
3) where solid ground changes to soft ground.

In case of uneven settlement, it is first necessary to estimate the settlement differences. It is especially important to make calculations based on data obtained through soil studies as mentioned earlier. Countermeasures should be implemented as follows according to the results of the calculations.

(1) Small uneven settlement
There is no need to give particular consideration if final uneven settlement is able to be absorbed by the pipe joints only. Pipes should be jointed within a half of the allowable deflection angle. If there is a possibility that even settlement is greater than assumed values because of uncertain factors such as inadequate boring data, application of collars might be examined as a countermeasure.

(2) Large uneven settlement
If uneven settlement cannot be absorbed by the pipe joints only, examination for next countermeasures should be carried out to determine whether it can be absorbed by collars or not. Collars have twice the allowable deflection angle of mechanical joint and also a large amount of expansion (See Table 14-3). Generally a number of collars should be configured in the design.

Maximum expansion of K-type joint collar **Table 14-3**

DN	Deflection angle at 2 joints	Maximum expansion (mm)
80	10°00'	160
100	10°00'	160
150	10°00'	165
200	10°00'	170
250	10°00'	175
300	10°00'	180
350	9°40'	185
400	8°20'	190
450	7°40'	195
500	6°40'	200
600	5°40'	210
700	5°00'	220
800	4°20'	230
900	4°00'	240
1000	3°40'	250
1100	3°20'	260
1200	3°00'	270
1400	3°00'	340
1500	3°00'	350
1600	3°00'	360
1800	3°00'	380
2000	3°00'	400
2100	3°00'	410
2200	3°00'	420
2400	3°00'	440
2600	3°00'	460

14-5 Self-anchoring Flexible Joint

When it is required that the joint is capable of preventing slip-out and allowing an angular deflection, self-anchoring flexible TS-type joint can be employed. TS-type joint allows an expansion until it is locked when pipeline is settled, and can withstand the slip-out force within its allowable maximum restrained force. Therefore the joint must be selected so that the amount of estimated settlement of the ground to be less than the amount of estimated settlement of the pipeline.

Pipes with TS type joint are available ranging from DN400 to DN1600. The allowable angular deflection and maximum pressure under deflected condition are given in Table 14-4.

TS-type joint Fig. 14-6

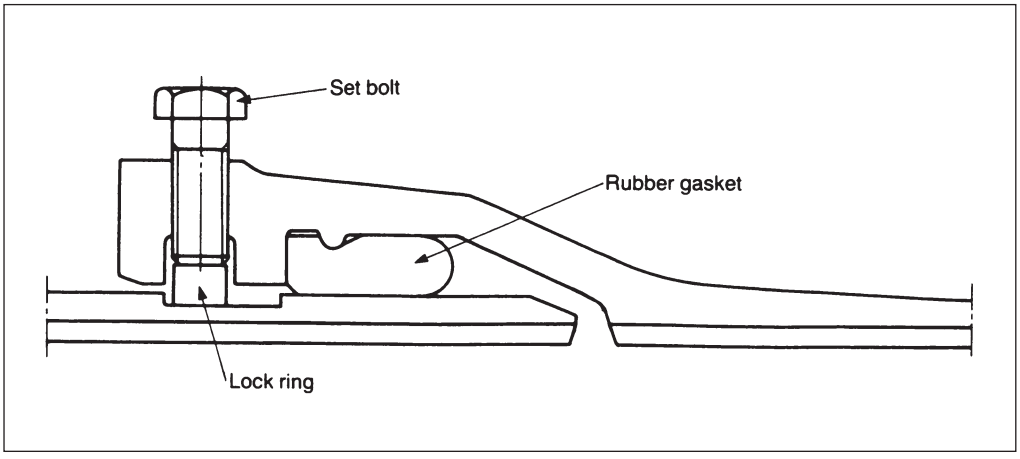

Table 14-4

DN	Allowable angular deflection	Allowable maximum pressure under deflected condition (MPa)
400	1°45'	2.1
450	1°30'	2.1
500	1°25'	2.1
600	1°10'	2.0
700	1°10'	2.0
800	1°00'	2.0
900	1°00'	1.6
1000	1°00'	1.3
1100	1°00'	1.3
1200	1°00'	1.3
1400	1°00'	1.1
1500	1°00'	1.1
1600	1°00'	1.1

TS type joint can be used as a conventional flexible push-on joint if lock-ring is not set and spigot pipe with no groove for TS type joint is not used.

Note. When expansion joints are employed in a ductile iron pipeline, a well-balanced design should be executed giving full consideration to the characteristics of the expansion joints and those of ductile iron pipe joints, i.e., rigidity of bending and expansion-contraction, slip-out prevention capability, and so on.

14-6 Curved Parts of Pipeline

Pipelines invariably have vertically or horizontally curved stretches in the main or branch pipeline. These deflected points cause thrust force due to the internal pressure therefore is protected with concrete blocks in principle. However in extremely soft ground, concrete blocks might cause uneven settlement of the pipeline. Consequently, it is necessary to arrange the design so that the weight of these parts is equal to that of straight parts of the pipeline. A design using restrained joints should be made as described in Chapter 8.

14-7 Precaution for Pipe Laying

The followings are very important points to be considered when laying pipes in soft ground.

14-7-1 Pipe installation

It is important to prevent ground softening by kneading of the soil at pipeline installation especially in case of extremely hydrous clayey soil. It is also important to correct any improperly declining pipes or deflected joints at each occurrence.
It is highly recommendable making a sand bed on the trench bottom.

14-7-2 Backfilling

Pipeline settlement is particularly great during and just after backfilling so that it is important to backfill pipes evenly and carefully. In some situations, it may be necessary to suspend pipes by wire ropes during backfilling. After the completion of backfilling, it is advisable not to place excavated soil, heavy machines or mechanical equipment over the pipes so as to prevent irregular pipeline settlement.

14-7-3 Removal of sheeting

When the trench wall is protected by sheeting, care should be paid at the sheeting removal. The problem here is that, in some situations, carefully installed pipes move from their established position when sheeting is removed. One countermeasure is the selection of removing method after careful consideration of the ground features. Special attention should be given to the differences in the ground level on either side of the installed pipeline. Depending on the circumstances, grouting method may have to be employed simultaneously.

14-7-4 Floating of pipes

Additionally in soft ground, there are many cases where water table is so high that the empty pipes are apt to float. Backfilling at an early stage is effective in preventing this phenomenon. It is further advisable to fill the pipes with water as soon as possible after installed. (Refer to Section 11-9-4)

14-7-5 Corrosion prevention

Generally soft ground areas include coastal reclaimed lands, sludge areas, peat areas, etc.. At these sites the water table will be high and soil will be very corrosive. Therefore at the planning stage and during the soil studies, the corrosiveness of the soil should be evaluated by means of boring and soil test. If necessary, special corrosion prevention measures should be applied externally to the pipes. Polyethylene sleeving method is usually used as an additional corrosion prevention measure for ductile iron pipes. (Refer to Section 9-2)

Chapter 15 Piping under Special Conditions

15-1 Pipe Jacking

Pipe jacking method can be used to install a pipeline in the ground without trench excavation. This method is applicable for negotiating obstacles such as roads, railways, canals and rivers.

15-1-1 Jacking ductile iron pipe

Body portion of jacking ductile iron pipe is sheathed with reinforced concrete to make the whole outside diameter uniform along the pipe axis. Jacking force is transferred to the socket face through the puddle flange welded on the spigot of the connected pipe. There are two types of joint for jacking ductile iron pipe. They are push-on type (TD type joint) for DN300 to DN1600 and mechanical type (UD type joint) for DN700 to DN2600. Basically jacking ductile iron pipes are manufactured in accordance with Japanese standard (JIS). The nominal pipe outside diameter by Japanese standard is slightly different from that by ISO standard, therefore change collars or change spigots shall be used to connect pipes of these standards. (Refer to Chapter 12) However DN700 to DN1600 jacking ductile iron pipe with push-on joint may be supplied with ISO standard pipe.

UD-type jacking ductile iron pipe (DN700 to DN2600) **Fig. 15-1**

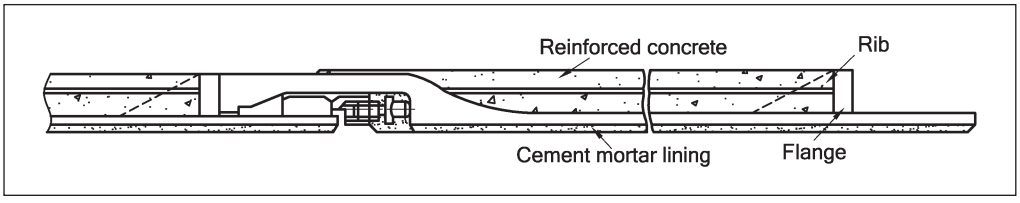

TD-type jacking ductile iron pipe (DN300 to DN1600) **Fig. 15-2**

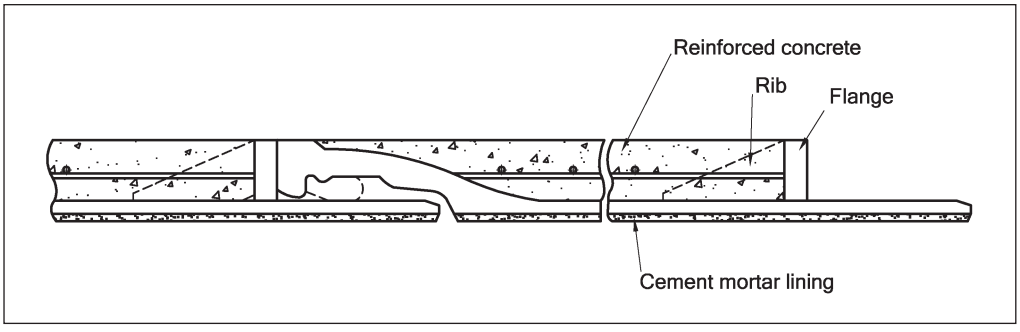

15-1-2 Jacking method

There are some pipe jacking methods such as automatic jacking, semi-shield jacking and hand-mining jacking. Automatic jacking and semi-shield jacking methods employ special jacking machines. In case of hand-mining jacking, pipe is pushed into the ground by hydraulic jacks and persons should enter the pipe to carry out the soil in the pipe. This hand-mining method is recommended to DN1000 and larger pipes. An example of equipment for hand-mining jacking is shown in Fig 15-3.

General arrangement of pipe jacking equipment Fig. 15-3

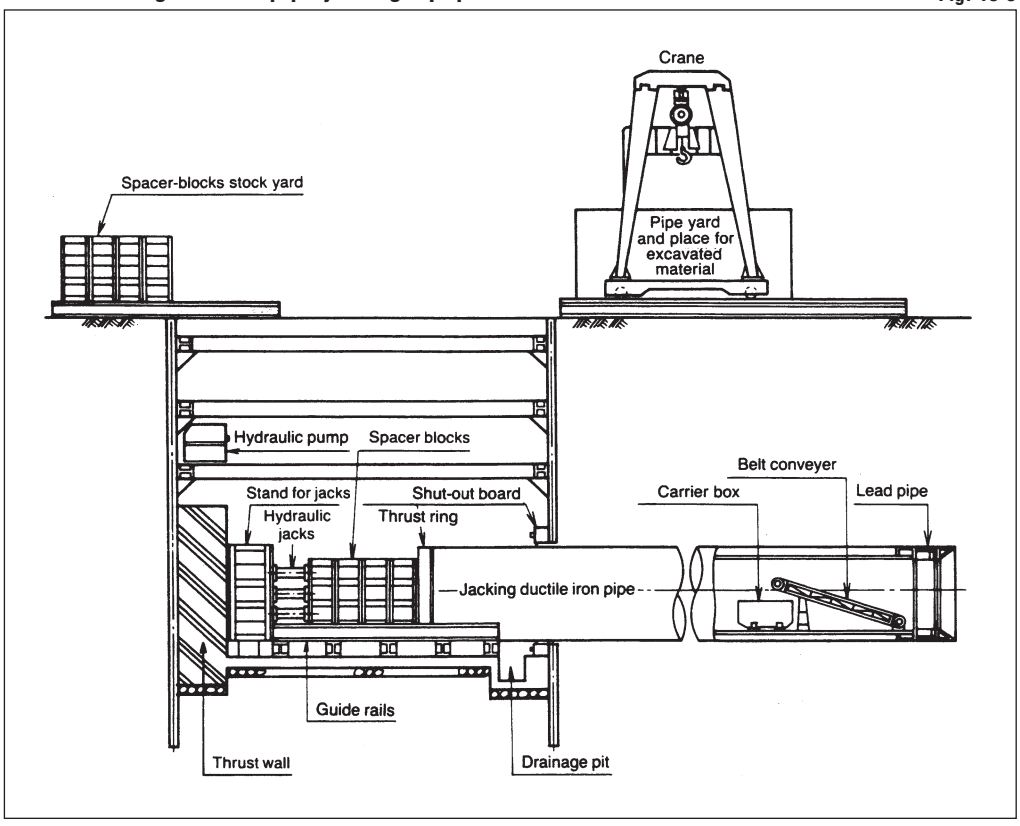

15-1-3 Allowable resistance force of jacking pipe

Pipes shall be jacked within the allowable resistance force of the jacking pipe given in the below table.

Allowable resistance force of jacking ductile iron pipe Table 15-1

DN	Allowable resistance force (kN)					
	Class of pipe by Japanese standard			Class of pipe by ISO standard		
	Class 1	Class 2	Class 3	Class K9	Class K10	Class K11
300	2,060	-	1,770	-	-	-
350	2,450	-	1,770	-	-	-
400	2,840	2,450	2,160	-	-	-
450	2,840	2,840	2,450	-	-	-
500	3,730	3,330	2,840	-	-	-
600	3,730	3,730	3,730	-	-	-
700	6,570	5,790	4,810	4,540	5,870	6,570
800	6,570	6,570	5,790	5,410	6,570	6,570
900	6,570	6,570	6,570	6,350	6,570	6,570
1000	9,020	9,020	8,040	7,360	9,020	9,020
1100	9,020	9,020	9,020	8,450	9,020	9,020
1200	9,020	9,020	9,020	9,020	9,020	9,020
1400	9,020	9,020	9,020	—	—	—
1500	12,360	12,360	12,360	12,360	12,360	12,360
1600	12,360	12,360	12,360	12,360	12,360	12,360
1800	12,360	12,360	12,360	-	-	-
2000	18,670	18,670	18,670	-	-	-
2200	18,670	18,670	18,670	-	-	-
2400	18,670	18,670	18,670	-	-	-
2600	23,240	23,240	23,240	-	-	-

Note The above values should be distributed evenly around the circumference of the pipe.

15-2 Piping on Slope

There is a danger of sliding of a pipeline laid on a slope steeper than:
- 20% for aboveground pipeline
- 25% for underground pipeline

This danger can be eliminated by providing a concrete anchor block behind the socket of each pipe. In this case, pipe socket shall be directed upwards.

Example of concrete anchor block design

(1) Design conditions

Slope: $\theta = 32^\circ$

Pipe: DN600×6 m long, Class K-9 (Outside diameter D = 635 mm)

Weight of pipe include the lining and water in the pipe: W = 26.5 kN

Allowable adhesion strength of concrete to pipe: T_a= 500 kN/m^2

Allowable vertical bearing strength of the ground: q_a= 100 kN/m^2

Allowable lateral bearing strength of the ground: q_a' = 50 kN/m^2

Example of concrete anchor block design **Fig. 15-4**

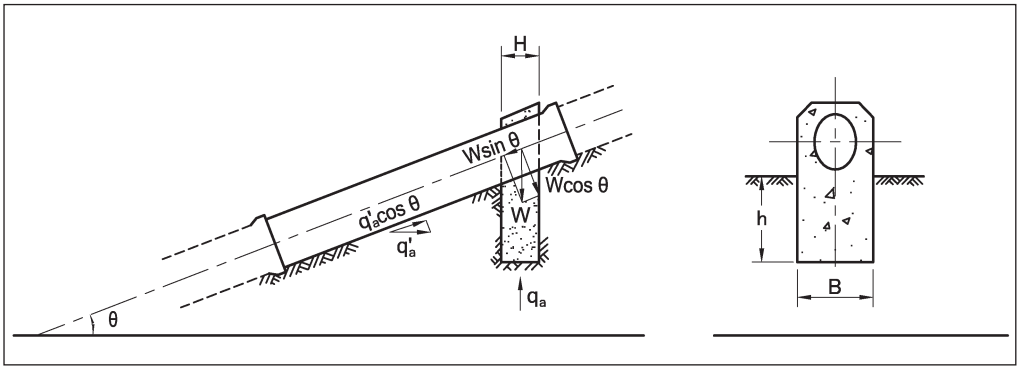

(2) Dimensions of concrete block

1) Thickness of block: H

The thickness required for the adhesion of concrete to pipe; H_1

$$H_1 \geqq \frac{W \sin\theta\cos\theta}{\pi D \tau_a} = \frac{26.5 \times \sin 32^\circ \times \cos 32^\circ}{\pi \times 0.635 \times 500} = 0.012 \text{ m}$$

The thickness required for bearing strength of ground; H_2

$$H_2 \geqq \frac{W}{q_a B} = \frac{26.5}{100 \times 0.9} = 0.29 \text{ m}$$

Where, B: Width of the block (B = DN + 0.3 m = 0.9 m)

Select the larger of H_1 and H_2 and set the safety factor 2.0. Then, H = 0.58 m.
Specify 0.6 m for the thickness of the block.

2) Depth of block in the ground: h

$$h \geqq \frac{W \tan\theta}{q'_a B} = \frac{26.5 \times \tan 32^\circ}{50 \times 0.9} = 0.368 \text{ m}$$

Set the safety factor 2.0. Then, h = 0.74 m
Finally, specify 0.8 m for the depth of embedment.

15-3 Aboveground Piping

It is recommended that aboveground piping with socket and spigot pipes be provided with one support per pipe. The pipe support should have a supporting angle of between 90° and 120° and positioned just behind the socket of each pipe.
Pipes should be secured to the supports with steel straps and rubber band so that axial movement due to expansion and contraction caused by temperature change is absorbed at individual joint in the pipeline.
Fittings, such as bends and tees, which will produce thrust force due to internal pressure, should be protected with anchorage.

Example of aboveground piping **Fig. 15-5**

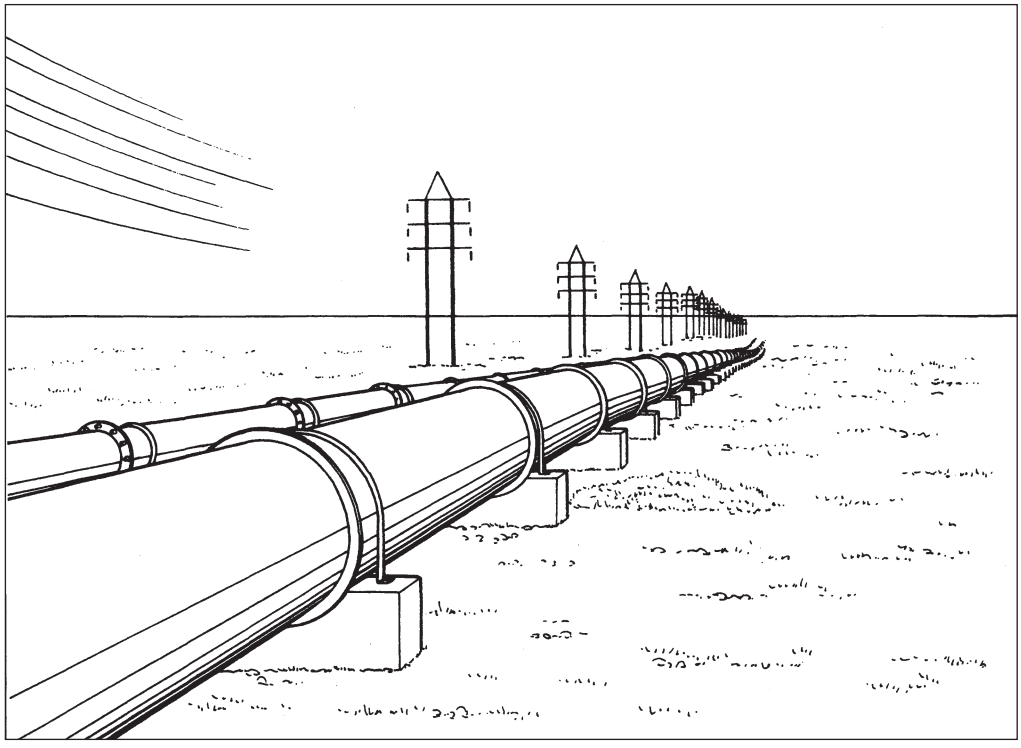

Pipe supporting angle **Fig 15-6**

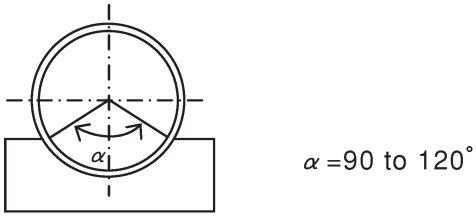

15-4 Piping in Tunnel

For piping in tunnel, internal mechanical joint (U-type joint) offers following advantages:

(1) All jointing works can be done at pipe inside so that the space between the inside of tunnel and outside of pipes can be made minimal. This means pipe diameter can be made maximum.
(2) Jointing work uses no fire or welding, therefore pipes can be jointed safely in the tunnel.
(3) Assembling of mechanical joint is easy.
(4) U-type joint is flexible, therefore it will be possible to lay pipes according to the curvature of the tunnel.

Pipes and fittings with U-type joint are ranged from DN700 to DN2600 and manufactured in accordance with Japanese standard (JIS).

U-type joint Fig. 15-7

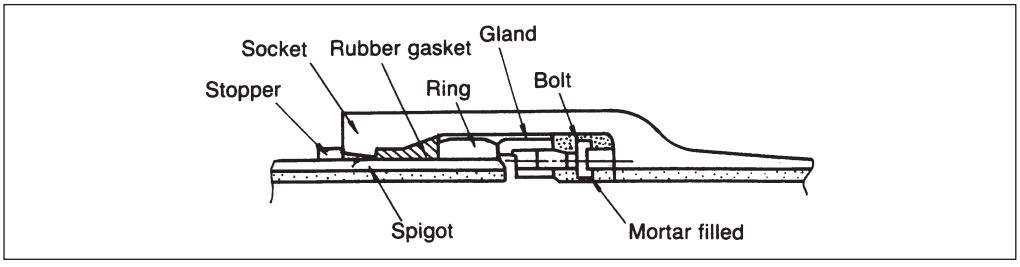

Example of in-tunnel piping Fig. 15-8

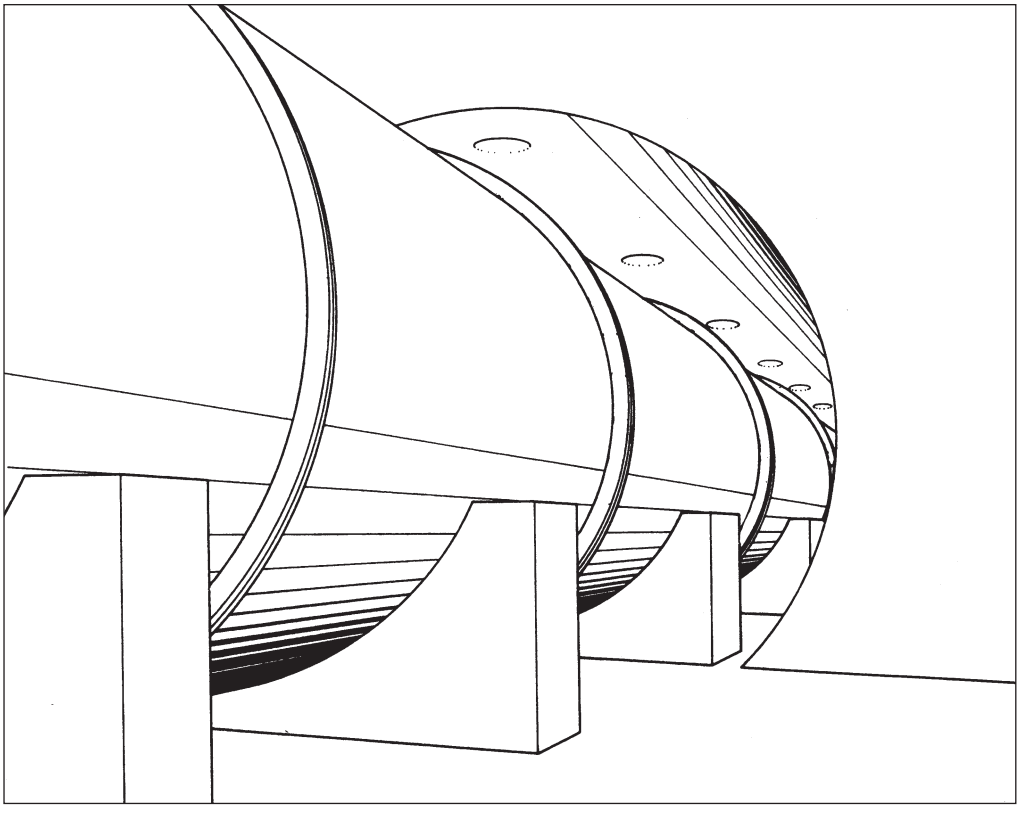

15-5 River Crossing

There are two possibilities for river or channel crossing, i.e., over-crossing and under-crossing. Over -crossing is by hanging the pipeline on a bridge or by water-bridge. Under-crossing is by open-cut after shut the flow, pipe jacking, or shield method.

Example of aqueduct over bridge **Fig. 15-9**

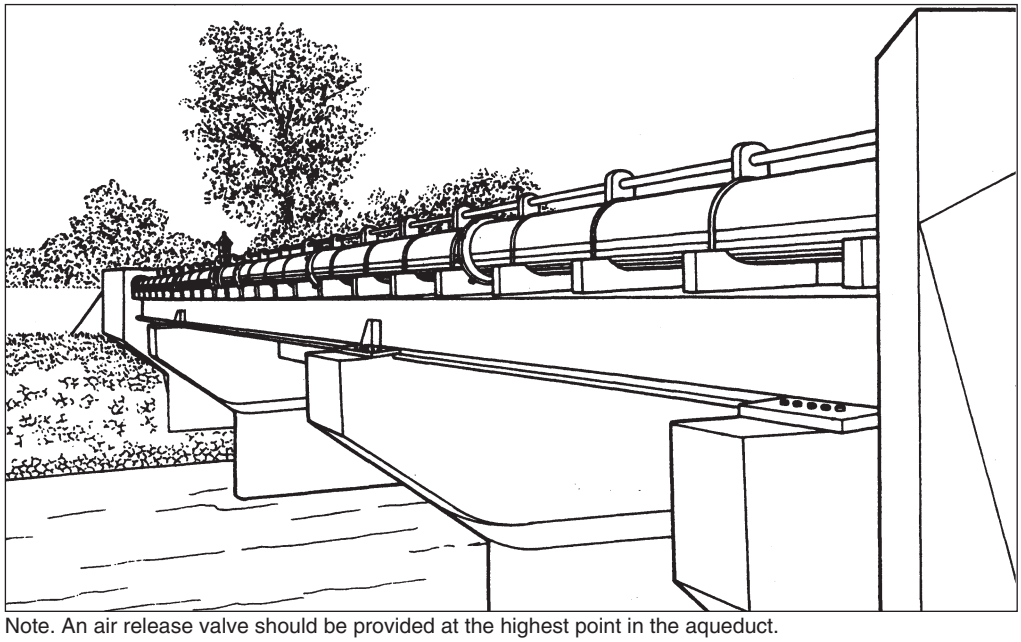

Note. An air release valve should be provided at the highest point in the aqueduct.

Example of water bridge **Fig. 15-10**

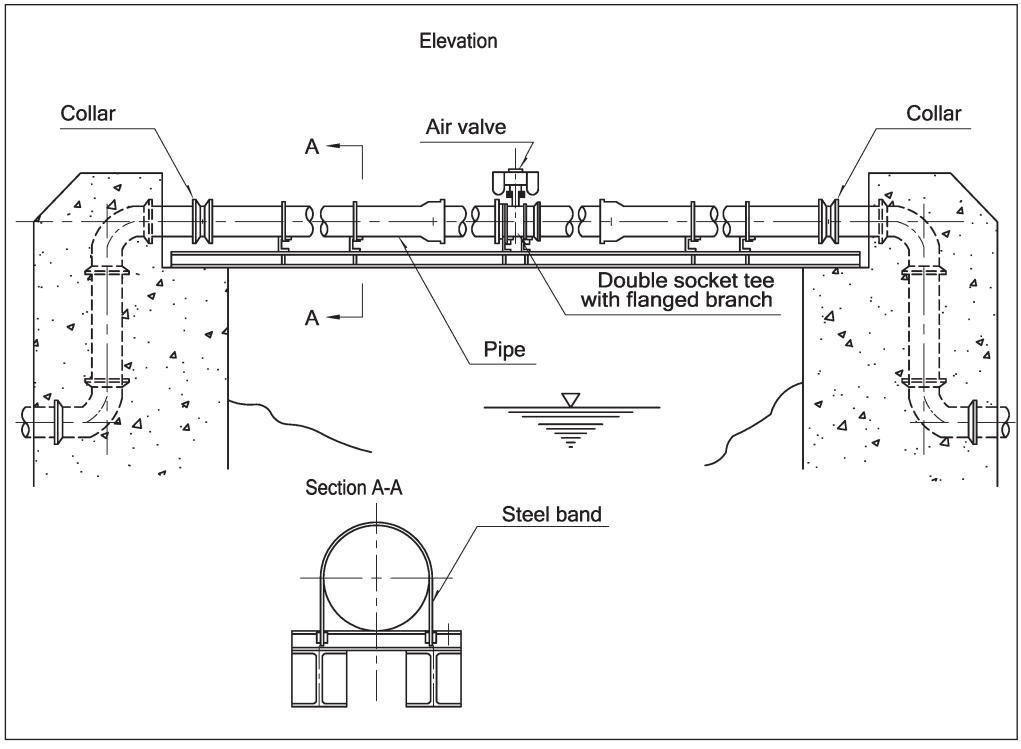

Example of river-bed crossing Fig. 15-11

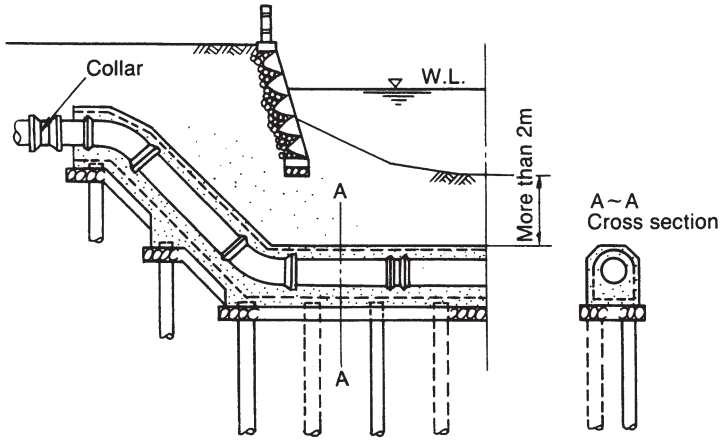

(1) It is recommended laying multiple pipelines for maintenance.
(2) Foundation work for under-crossing should be conducted with greatest care, most durable materials, and most reliable construction techniques.
(3) For the protection, under-crossing pipeline should be covered with concrete. (See Fig. 15-11) Other protective measures should be taken as necessary.

15-6 Railway and Road Crossings

In recent years, when a water main is required to pass underneath a railway or road, pipe jacking method or shield method is often employed to minimize the disturbance of train or road traffic.
Pipes to be laid under a railway should be encased in protective devices such as closed conduit, casing pipe, etc. to prevent direct impact or railway load and vibrations.

Example of railway crossing by casing method Fig. 15-12

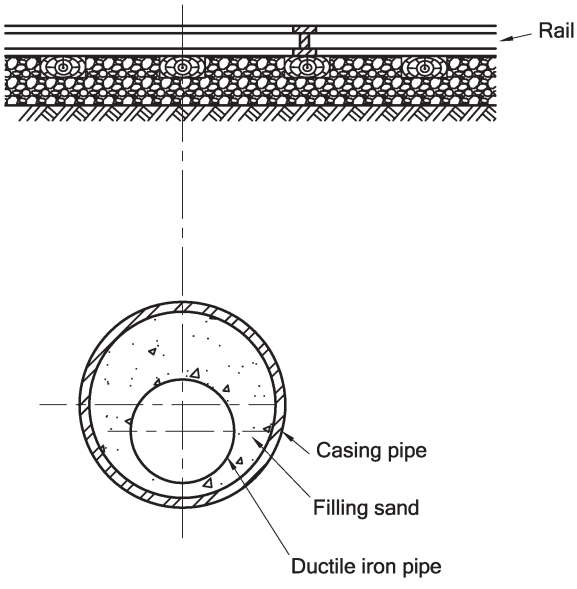

15-7 Piping Inside Buildings

Hanger or support for piping inside buildings shall be properly designed to prevent the pipeline from deflection.
Example of hangers and supports for low pressure pipeline and high pressure pipeline are shown in Fig. 15-13 and Fig. 15-14 to 15-16 respectively.

Example of horizontal piping (low pressure) **Fig. 15-13**

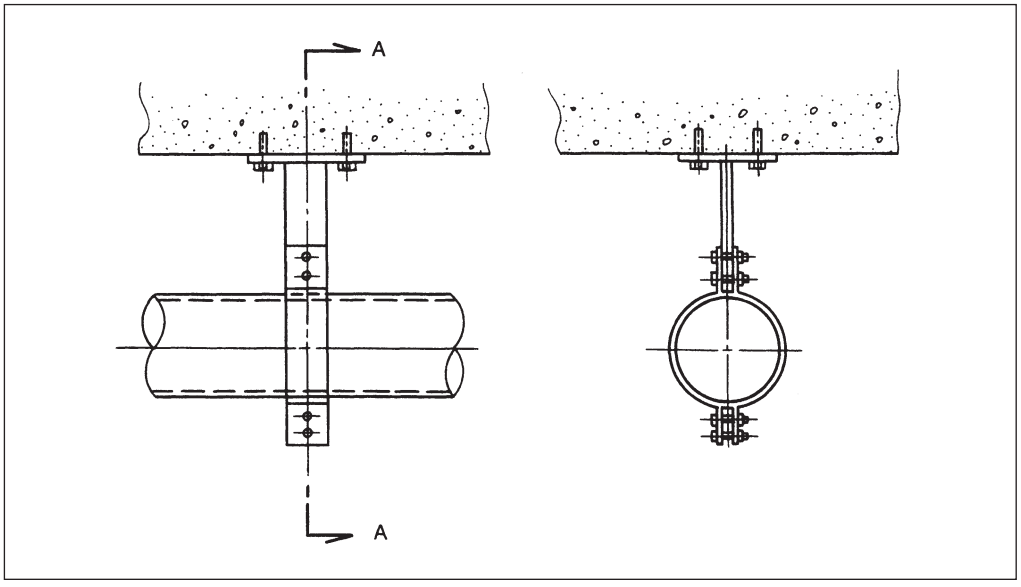

Example of horizontal piping (high pressure) **Fig. 15-14**

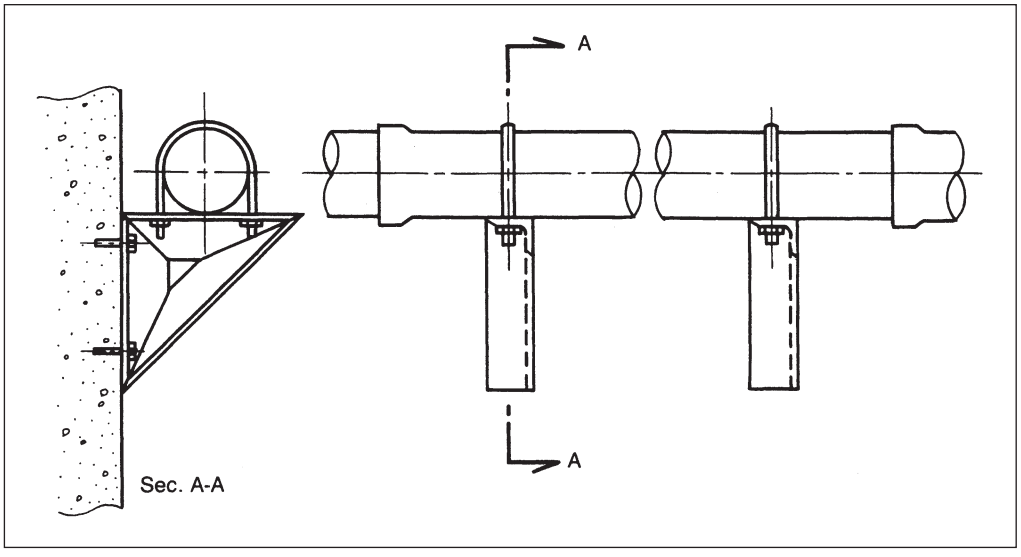

Example of horizontal piping (high pressure)

Fig. 15-15

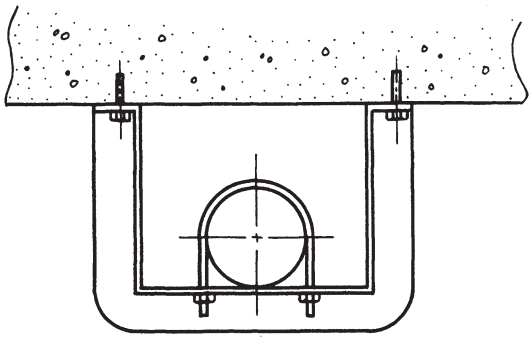

Example of vertical piping (high pressure)

Fig. 15-16

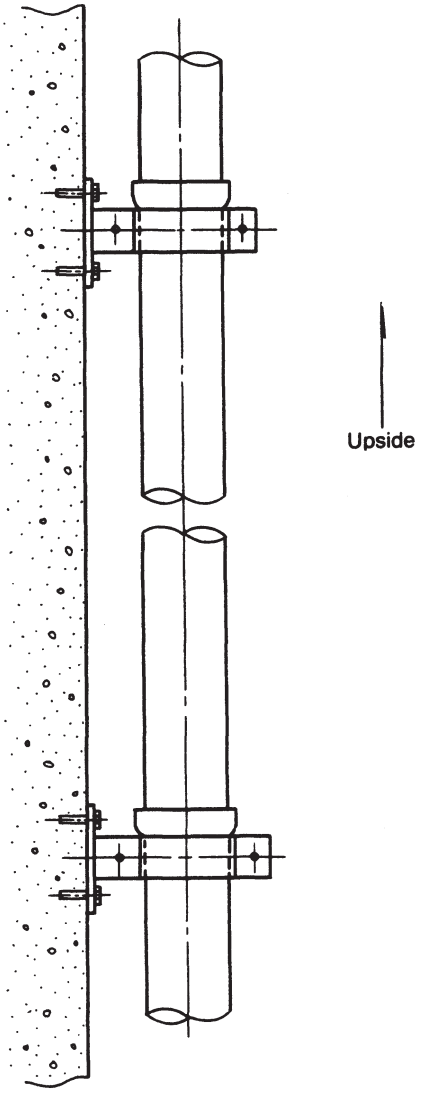

Fittings should be protected from thrust force caused by internal pressure. Examples of anchoring for fittings are shown in Fig. 15-17 and 15-18.

Example of anchoring at bend

Fig. 15-17

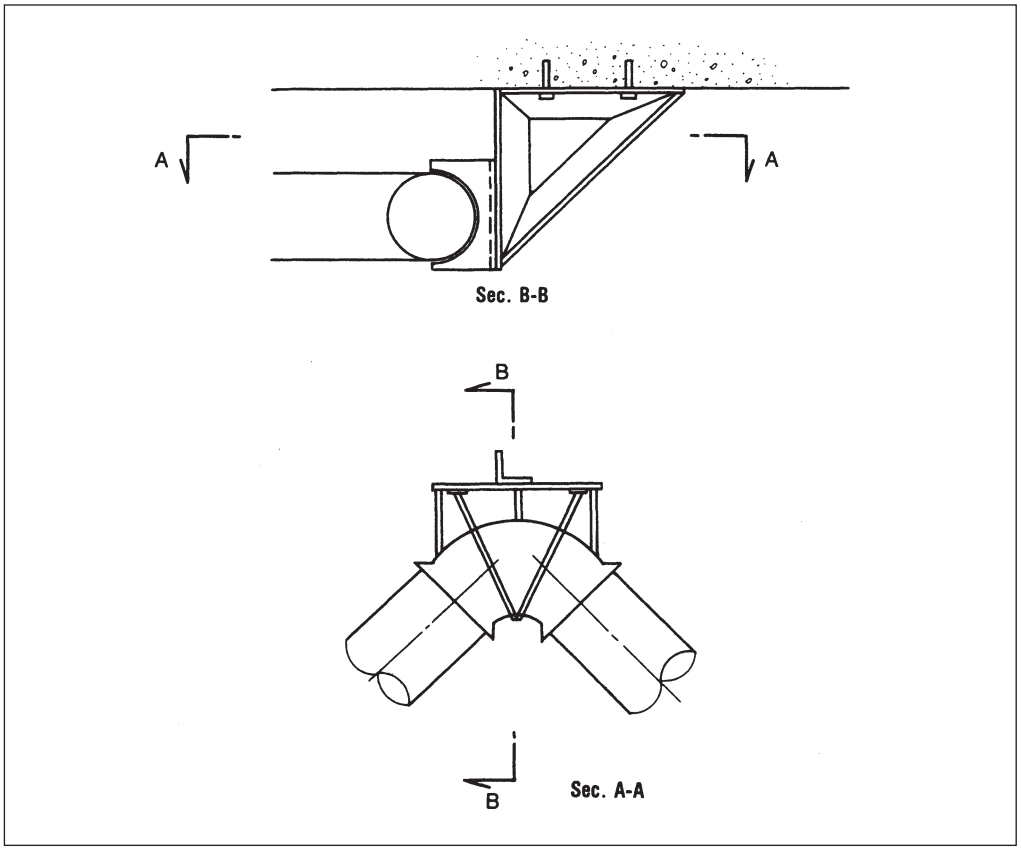

Example of anchoring at tee

Fig. 15-18

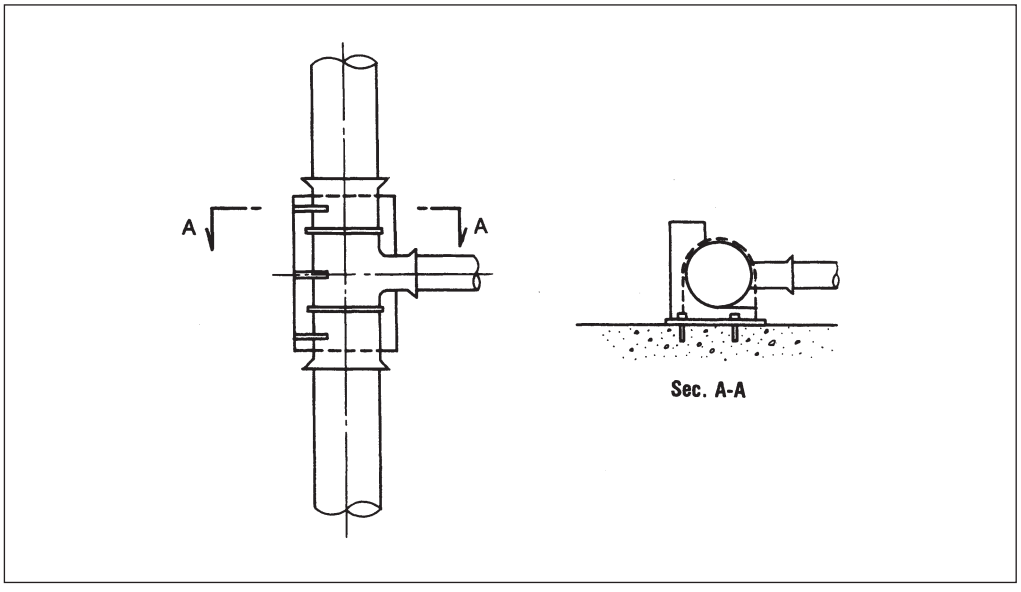

Chapter 16 Service Connections

16-1 General

Service connections vary in size from small services supplying individual homes to large outlets for industrial and other users. Service connections in common use on ductile iron pipes include using direct tapping into the pipe wall or using saddles on the drilled pipes. Large outlets can be provided using tees in the pipeline. Service connection work can be carried out on non-pressurized mains or pressurized mains using specially designed machines.

16-2 Type of Service Connections

The recommended branching method for Class K-9 ductile iron pipe is shown in the below table.

Branching method for Class K-9 ductile iron pipe **Table 16-1**

Connection inlet size (mm)	Nominal diameter of main pipes					
	80	100	150	200	250	300
13	Direct tapping (using saddles is recommended)					
19						
25						
32	Use saddles					
50						
80	Use tees					
100						

16-3 Direct Tapping

A tap of tapered thread should be made into the pipe wall using a tapping machine, and inlet connection having the same tapered thread should be screwed into it. The angle of taper and type of screw threads may vary depending on connections from different manufacturers. When fully tightened, the treaded inlet of the connection provides both an anchorage and a leak-tight seal. To ensure water-tightness of the connection, the use of some sort of sealing material, such as sealing tape or sealing paste is strongly recommended. Use of saddle instead of direct tapping can also be recommended.

Example of direct tapping **Fig. 16-1**

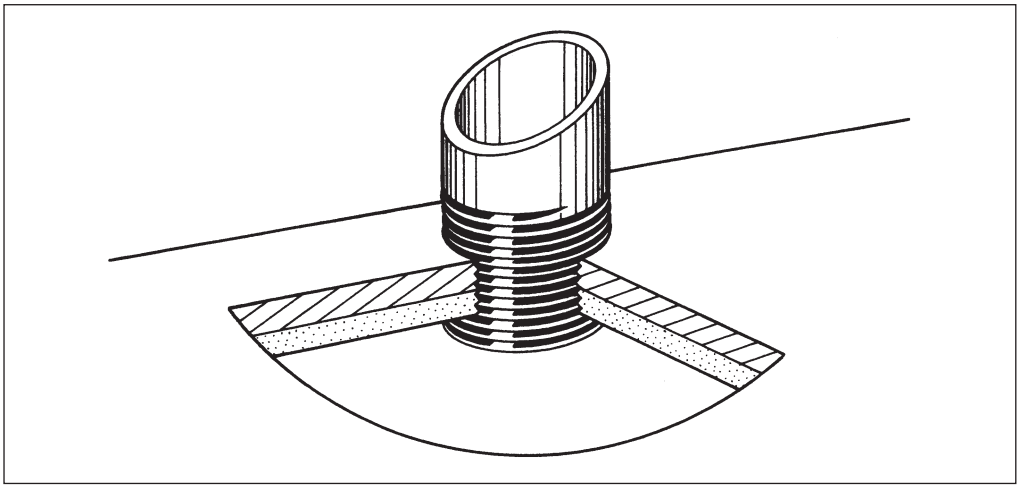

16-4 Tapping Saddle

A tapping saddle consists of one or two segments curved to match the outside diameter of the main pipe, linked by bolts or U-bolts. Saddle has a threaded hole into which a threaded inlet can be screwed.
Pipe may be drilled before or after the installation of the saddle.

Example of tapping saddle

Fig. 16-2

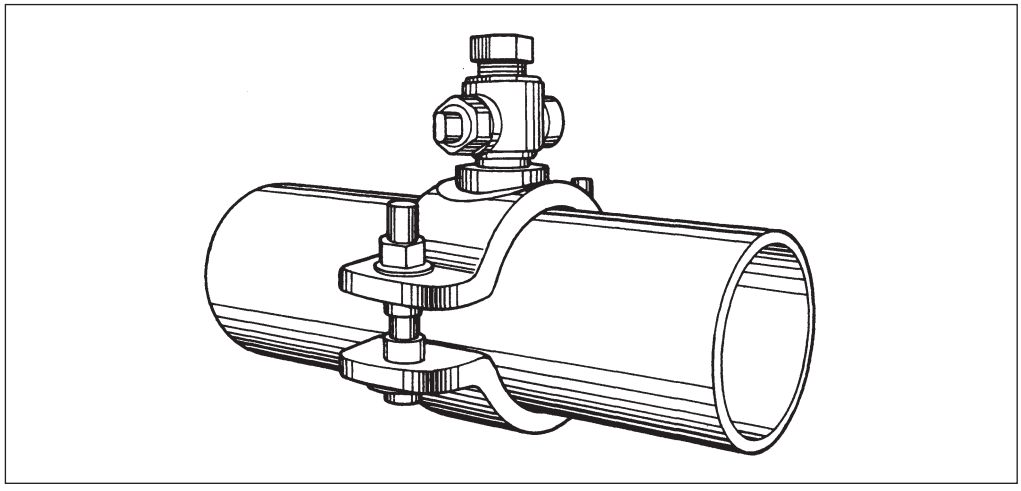

16-5 Insertion of Tee into Existing Pipeline

Tees for branching can be installed into the existing pipeline according to the following procedure:

16-5-1 In case of empty mains

(1) Decide three cut-positions (See Fig. 16-3). In this case, confirm that the outside diameters (circumferential length) of the pipe at the cut portions are within the manufacturer's tolerance.

Fig. 16-3

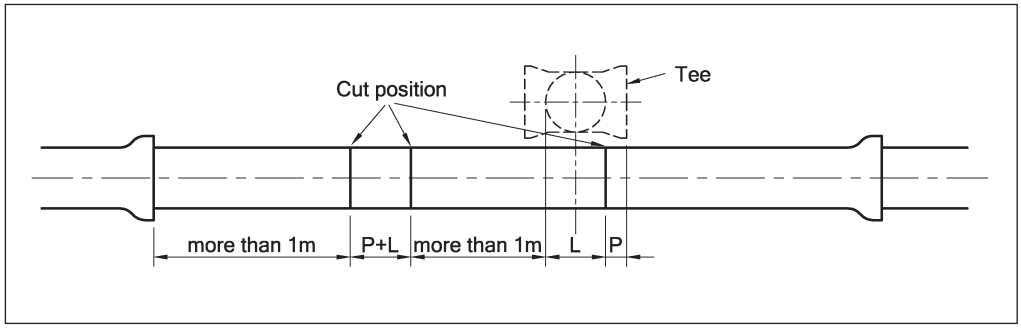

Whrere,L : Length of the tee
P : Socket depth of the tee

(2) Cut the pipe at the three positions. Remove and discard the cut out short pipe. Remove but save the longer pipe.

(3) Chamfer the cut ends of the existing pipes and taken out the pipe. Set the tee into the planed position and connect it to the spigot end of the existing pipe.

(4) Insert the collar with the gland and rubber gasket temporarily onto another spigot of the existing pipe.

Fig. 16-4

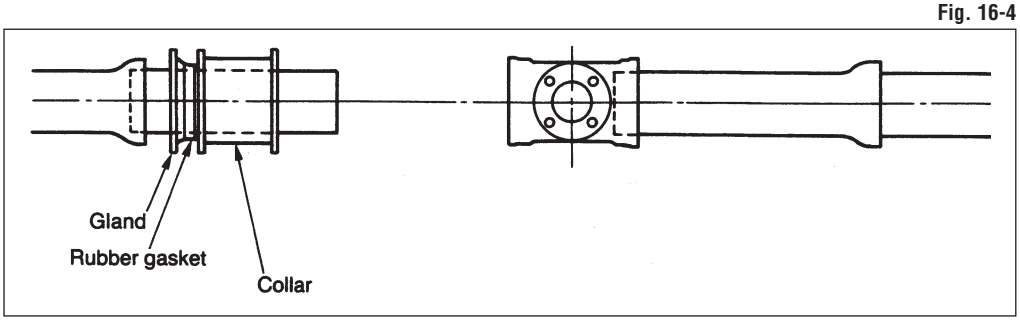

(5) Position the plain-ended pipe and connect it to the other side of the tee.

Fig. 16-5

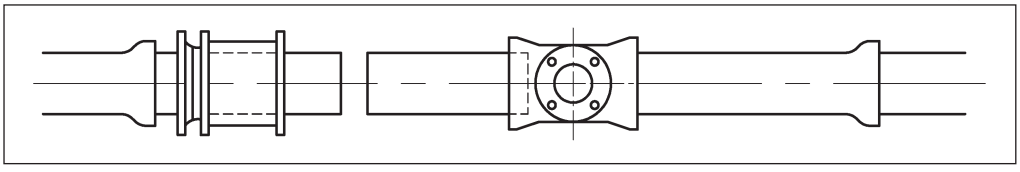

(6) Insert the gland and rubber gasket for the collar onto the plain-ended pipe. Set the collar between the plain-ended pipe and spigot of the existing pipe, and assemble the joints.

Fig. 16-6

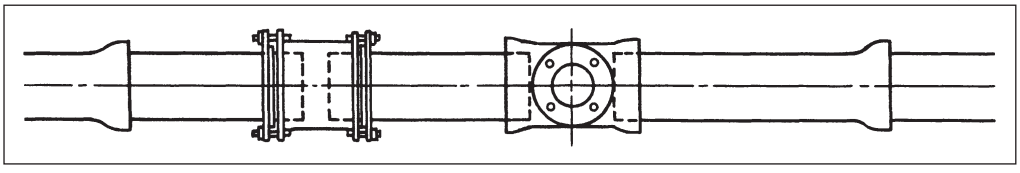

16-5-2 In case of pressurized main

(1) Set a special tee onto the planned position of the main and assemble it.

Fig. 16-7

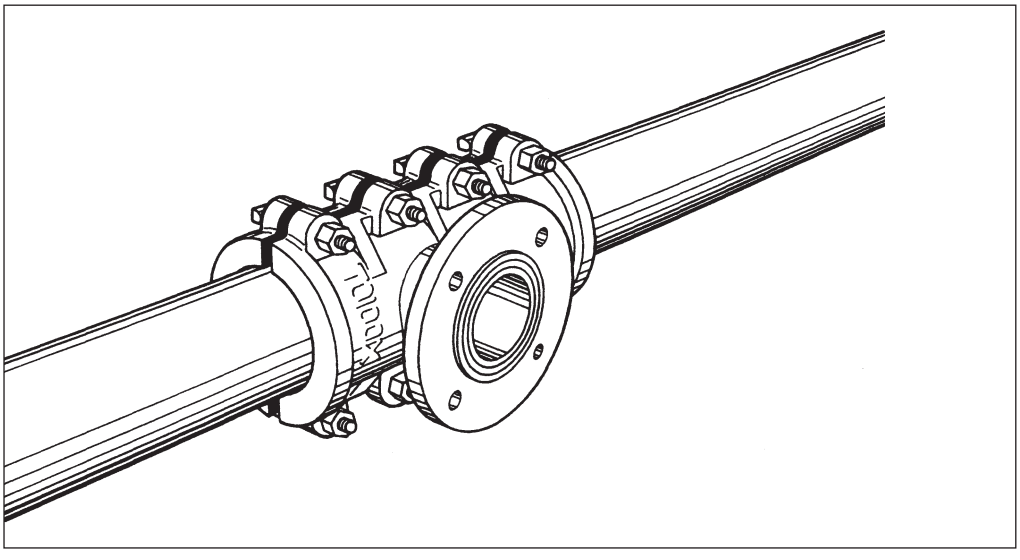

(2) Connect a stop valve to the branched flange of the special tee. The valve should be fully opened.

Fig. 16-8

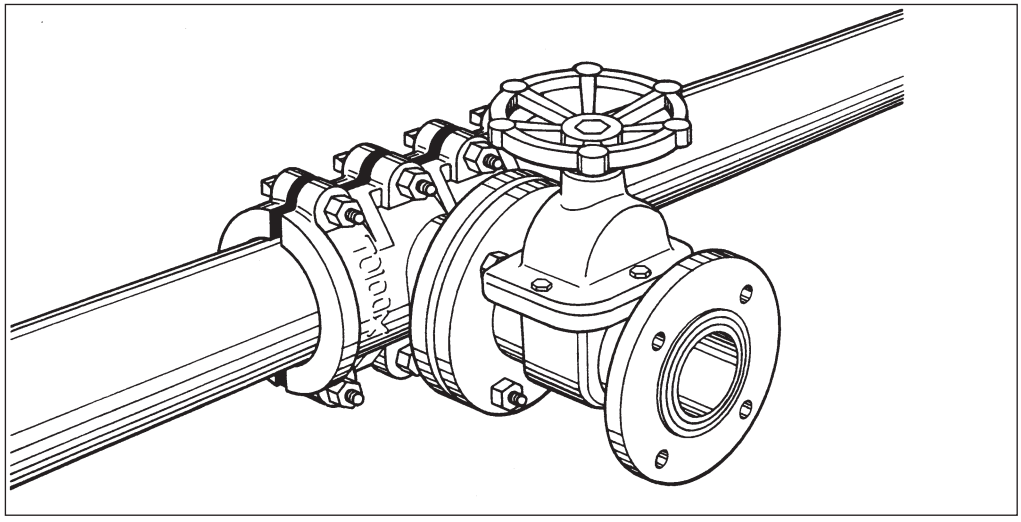

(3) Mount a drilling machine on the flange of the valve and drill a hole in the pipe wall.

Fig. 16-8

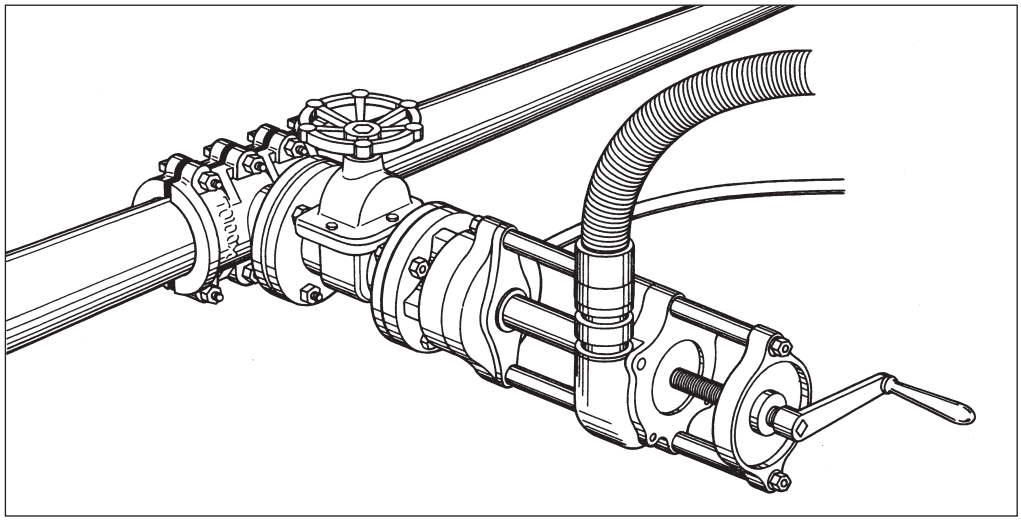

(4) After completion of the drilling work, withdraw the cutting head of the machine and close the stop valve completely. Then disassemble and remove the drilling machine.

Note. Special tees and drilling machine are available on request.

Appendix 1 Conversion Table—S.I., Metric And Imprerial

Acceleration

m/s^2	ft/s^2
3.048×10^{-1}	1
1	3.281

Area

m^2	are	ft^2	$mile^2$	acre
1	1.000×10^{-2}	1.076×10	3.861×10^{-7}	2.471×10^{-4}
1.000×10^{2}	1	1.076×10^{3}	3.861×10^{-5}	2.471×10^{-2}
9.290×10^{-2}	9.290×10^{-4}	1	3.587×10^{-8}	2.296×10^{-5}
2.590×10^{6}	2.590×10^{4}	2.788×10^{7}	1	6.400×10^{2}
4.047×10^{3}	4.047×10	4.356×10^{4}	1.563×10^{-3}	1

Density

g/cm^3	kg/m^3	$\ell b/in^3$	$\ell b/ft^3$
1	1.000×10^{3}	3.613×10^{-2}	6.243×10
1.000×10^{-3}	1	3.613×10^{-5}	6.243×10^{-2}
2.768×10	2.768×10^{4}	1	1.728×10^{3}
1.602×10^{-2}	1.602×10	5.787×10^{-4}	1

Energy, heat, work

J	kW·h	kgf·m	ℓbf·ft	kcal	Btu	HP·h	PS·h
1	2.778×10^{-7}	1.020×10^{-1}	7.380×10^{-1}	2.389×10^{-4}	9.478×10^{-4}	3.725×10^{-7}	3.777×10^{-7}
3.600×10^{6}	1	3.671×10^{5}	2.655×10^{6}	8.600×10^{2}	3.413×10^{3}	1.341	1.360
9.807	2.724×10^{-6}	1	7.233	2.343×10^{-3}	9.297×10^{-3}	3.652×10^{-6}	3.704×10^{-6}
1.356	3.766×10^{-7}	1.383×10^{-1}	1	3.239×10^{-4}	1.285×10^{-3}	5.049×10^{-7}	5.121×10^{-7}
4.186×10^{3}	1.163×10^{-3}	4.269×10^{2}	3.087×10^{3}	1	3.968	1.559×10^{-3}	1.581×10^{-3}
1.055×10^{3}	2.930×10^{-4}	1.076×10^{2}	7.780×10^{2}	2.520×10^{-1}	1	3.928×10^{-4}	3.984×10^{-4}
2.686×10^{6}	7.457×10^{-1}	2.739×10^{5}	1.981×10^{6}	6.416×10^{2}	2.546×10^{3}	1	1.014
2.648×10^{6}	7.355×10^{-1}	2.701×10^{5}	1.953×10^{6}	6.325×10^{2}	2.510×10^{3}	9.859×10^{-1}	1

Force

N	dyn	kgf	ℓbf
1	1.000×10^{5}	1.020×10^{-1}	2.248×10^{-1}
1.000×10^{-5}	1	1.020×10^{-6}	2.248×10^{-6}
9.807	9.807×10^{5}	1	2.205
4.448	4.448×10^{5}	4.536×10^{-1}	1

Length

m	in	ft	mile
1	3.937×10	3.281	6.214×10^{-4}
2.54×10^{-2}	1	8.333×10^{-2}	1.578×10^{-5}
3.048×10^{-1}	1.2×10	1	1.894×10^{-4}
1.609×10^{3}	6.336×10^{4}	5.280×10^{3}	1

Mass

kg	ℓb	oz	grain
1	2.205	3.527×10	1.543×10^{4}
4.536×10^{-1}	1	1.6×10	7.000×10^{3}
2.835×10^{-2}	6.25×10^{-2}	1	4.375×10^{2}
6.480×10^{-5}	1.42×10^{-4}	2.285×10^{-3}	1

Appendix 1 Conversion Table—S.I., Metric And Imprerial

Pressure, stress

P_a	bar	kgf/cm²	ℓbf/in²	atm	mmH_2O	mmHg or Torr
1	1.000×10^{-5}	1.020×10^{-5}	1.450×10^{-4}	9.869×10^{-6}	1.020×10^{-1}	7.501×10^{-3}
1.000×10^{5}	1	1.020	1.450×10	9.869×10^{-1}	1.020×10^{4}	7.501×10^{2}
9.807×10^{4}	9.807×10^{-1}	1	1.422×10	9.678×10^{-1}	1.000×10^{4}	7.356×10^{2}
6.895	6.89×10^{-2}	7.031×10^{-2}	1	6.805×10^{-2}	7.031×10^{2}	5.171×10
1.013×10^{5}	1.013	1.033	1.470×10	1	1.033×10^{4}	7.600×10^{2}
9.807	9.807×10^{-5}	1.000×10^{-4}	1.422×10^{-3}	9.678×10^{-5}	1	7.356×10^{-2}
1.333	1.333×10^{-3}	1.360×10^{-3}	1.934×10^{-2}	1.316×10^{-3}	1.360×10	1

Power

kW	kgf·m/s	ℓbf·ft/s	HP	PS	kcal/s
1	1.020×10^{2}	7.376×10^{2}	1.341	1.360	2.389×10^{-1}
9.807×10^{-3}	1	7.233	1.315×10^{-2}	1.333×10^{-2}	2.343×10^{-3}
1.356×10^{-3}	1.383×10^{-1}	1	1.817×10^{-3}	1.843×10^{-3}	3.239×10^{-4}
7.457×10^{-1}	7.607×10	5.504×10^{2}	1	1.014	1.782×10^{-1}
7.355×10^{-1}	7.505×10	5.425×10^{2}	9.859×10^{-1}	1	1.756×10^{-1}
4.186	4.269×10^{2}	3.087×10^{3}	5.611	5.691	1

Velocity

m/s	km/h	ft/s	mile/h
1	3.60	3.281	2.237
2.778×10^{-1}	1	9.114×10^{-1}	6.214×10^{-1}
3.048×10^{-1}	1.097	1	6.818×10^{-1}
4.470×10^{-1}	1.609	1.467	1

Volume

m³	ℓ	ft³	imp. gal	US gal
1	1.000×10^{3}	3.531×10	2.200×10^{2}	2.642×10^{2}
1.000×10^{-3}	1	3.531×10^{-2}	2.200×10^{-1}	2.642×10^{-1}
2.832×10^{-2}	2.832×10	1	6.229	7.481
4.546×10^{-3}	4.546	1.605×10^{-1}	1	1.201
3.785×10^{-3}	3.785	1.337×10^{-1}	8.327×10^{-1}	1

Air Relief Valve Chamber (1)

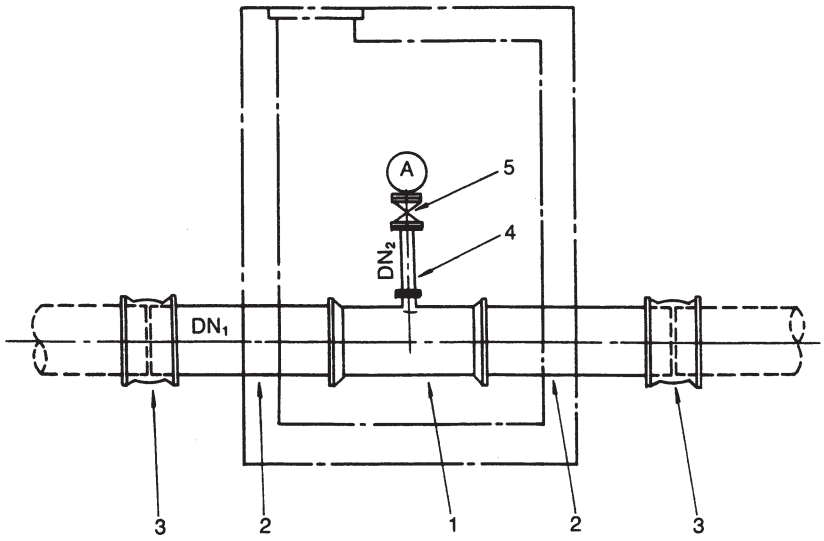

Section

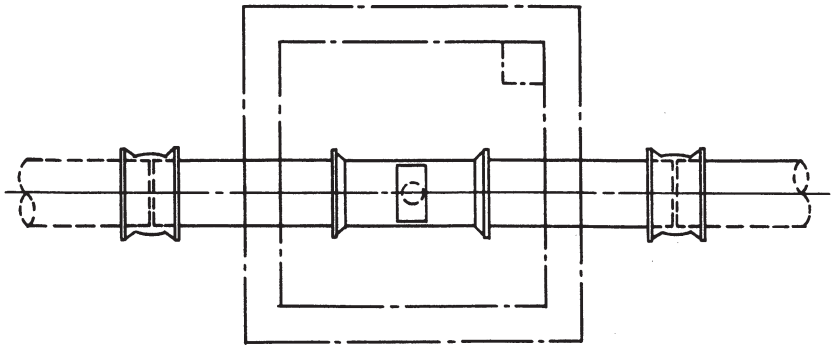

Plan

No.	Description
1	Double socket tee with flanged branch
2	Double spigot pipe
3	Collar
4	Double flanged pipe
5	Stop valve

Air Relief Valve Chamber (2)

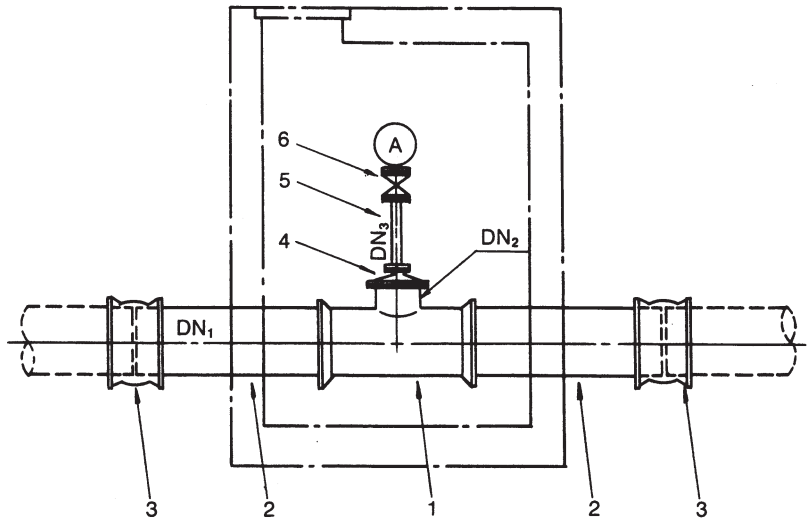

Section

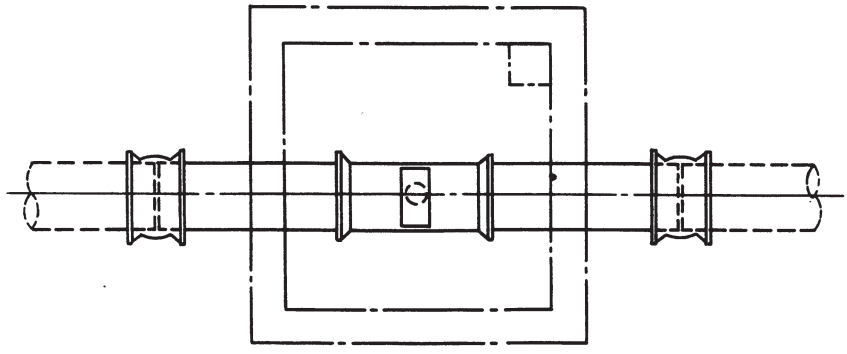

Plan

No.	Description
1	Double socket tee with flanged branch
2	Double spigot pipe
3	Collar
4	Cover
5	Double flanged pipe
6	Stop valve

Air Relief Valve Chamber (3)

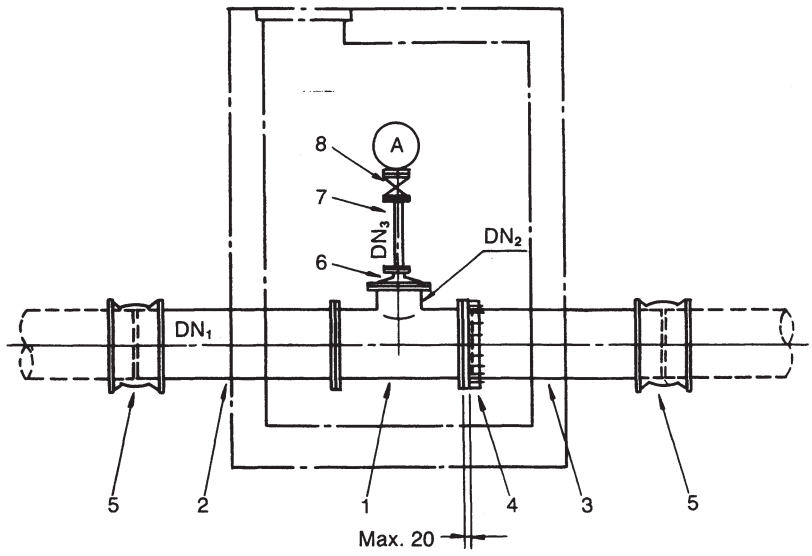

Section

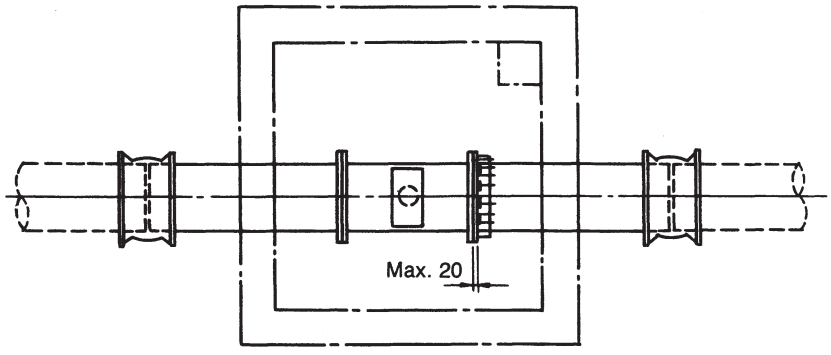

Plan

No.	Description
1	All flanged tee
2	Flange and spigot pipe
3	Double spigot pipe
4	Flange adapter
5	Collar
6	Cover
7	Double flanged pipe
8	Stop valve

Valve Chamber (1)

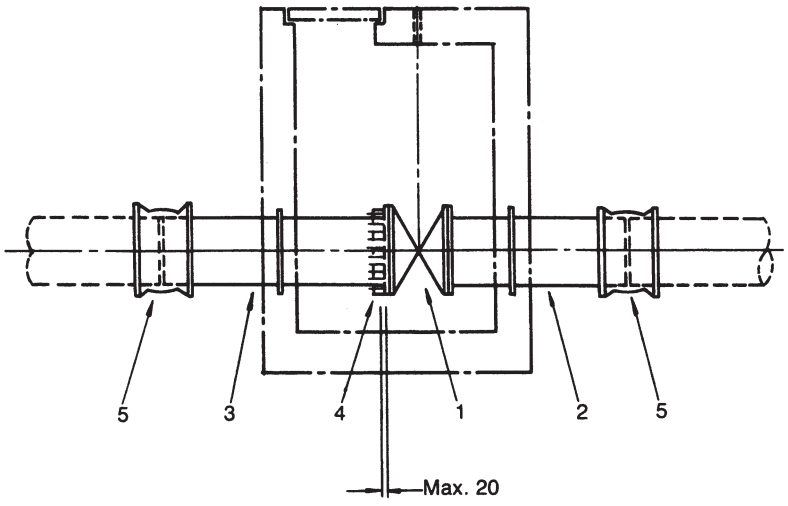

Section

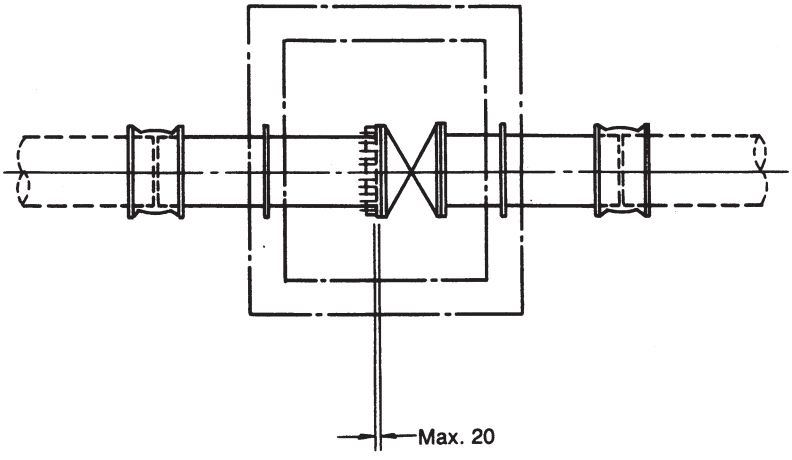

Plan

No.	Description
1	Stop valve
2	Flange and spigot pipe with puddle
3	Double spigot pipe with puddle
4	Flange adapter
5	Collar

Valve Chamber (2)

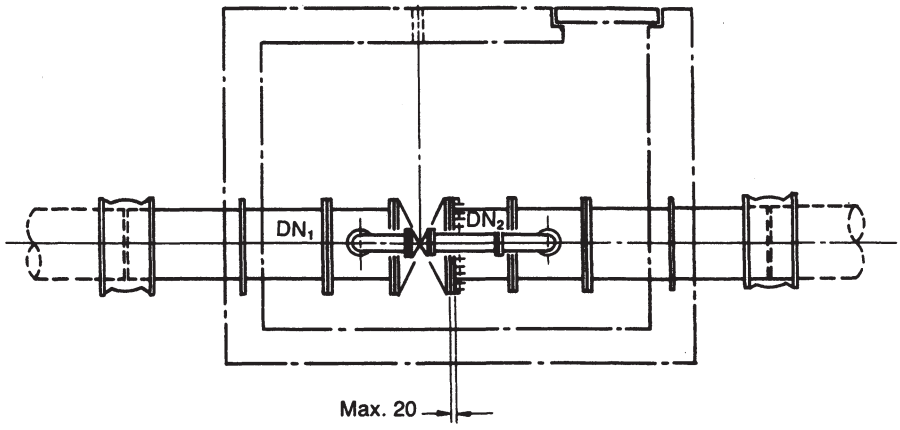

Section

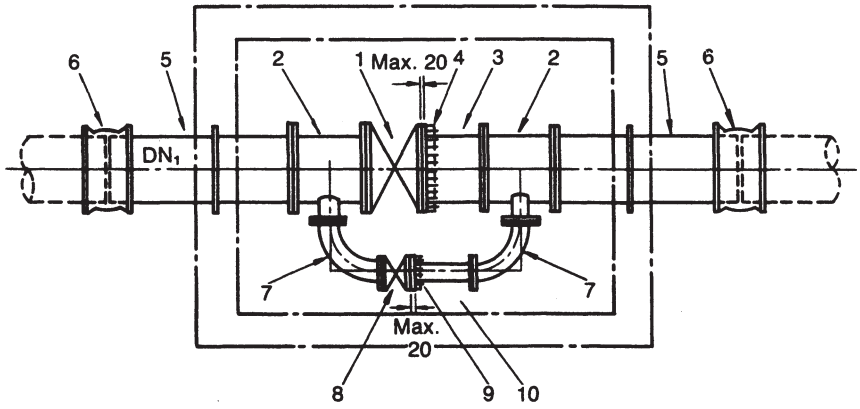

Plan

No.	Description
1	Stop valve
2	All flanged tee
3	Flange and spigot pipe
4	Flange adapter
5	Flange and spigot pipe with puddle
6	Collar
7	Double flanged 90° long radius bend
8	Stop valve
9	Flange adapter
10	Flange and spigot pipe

Wash-Out Facility

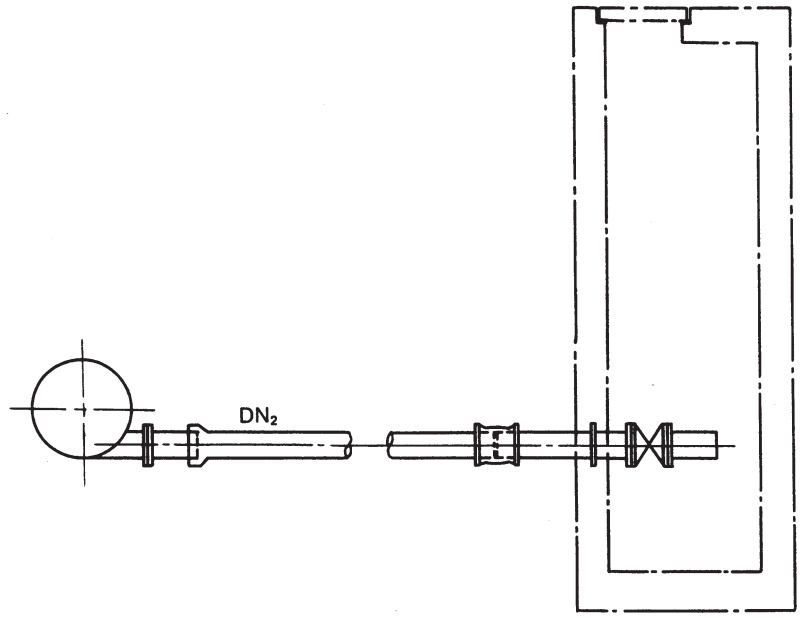

Section

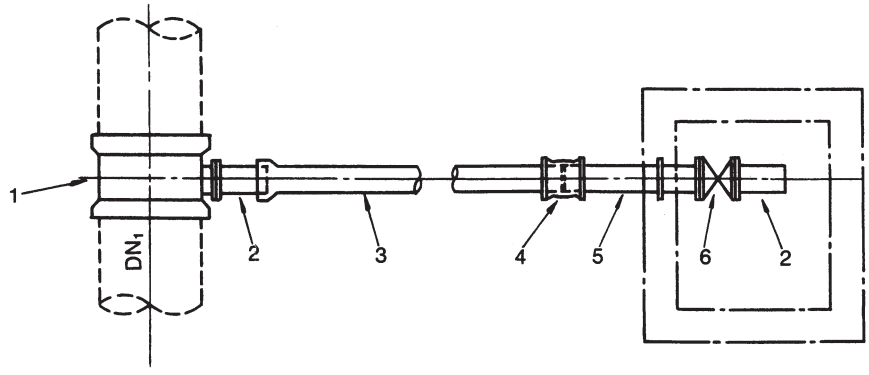

Plan

No.	Description
1	Double socket level invert tee with flanged branch
2	Flanged spigot
3	Pipe
4	Collar
5	Flange and spigot pipe with puddle
6	Stop valve

KUBOTA Corporation
Pipe Export Department
Ductile Iron Pipe Division
1-3, Nihombashi-Muromachi 3-chome, Chuo-ku, Tokyo 103-8310, JAPAN
Phone: (81) 3-3245-3245 Fax: (81) 3-3245-3830
Website: http://www.kubota.co.jp/ E-mail: ironpipe@kubota.co.jp

・**Beijing Office:**
Rm. 1551, New Century Office Tower, No. 6,
Southern Road, Capital Gym., Beijing,
CHINA 100046
Phone: 849-2277 Fax: 849-2280

Kubota reserves the right to change specifications or designs without notice.

Cat, No. 0084 Printed in Japan. '07.09. 0.5.KES.

Kubota

KUBOTA Corporation