MOTOR BOOK

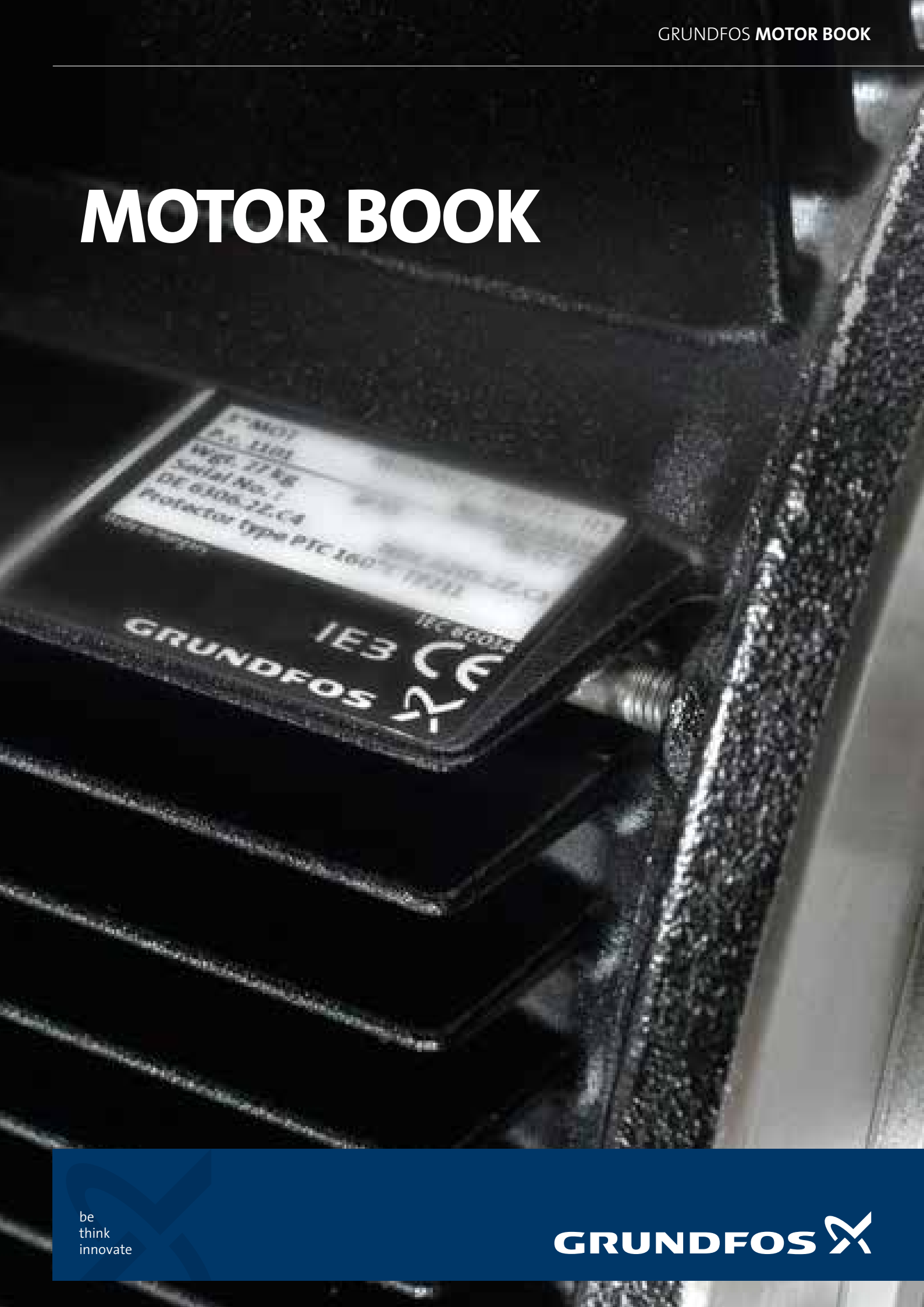

be
think
innovate

GRUNDFOS

Introduction

Welcome! This motor book will provide you with a wealth of information about electrical motors, how they work, what they can be used for, and so on. But before we delve into detailed explanations of the world of electrical motors, we should perhaps spare a brief thought for the purpose of these motors. After all, motors are always designed to carry out specific tasks. As this is a Grundfos publication, it is only natural that we should pay special attention to motors used for pumps – although much of the information contained within these pages will benefit all those with an interest in electrical motors.

If we start by casting our minds back in history, Archimedes discovered that water can be lifted or moved – what we call "pumping" today – by means of a rotating screw. Today, Grundfos honours this venerable pioneer of pumping in our company logo.

Rotation is an essential part of the act of pumping. This means that the motor is an essential part of any pump. Without the motor, there would be no rotation - and the water would not be moved anywhere.

The purpose of the electric motor is to create rotation – that is to convert electric energy into mechanical energy. Pumps are operated by means of mechanical energy. This energy comes from electric motors. In the process of converting energy from one kind to the other, magnetism plays a major role. In the following section we will present the basic principles of magnetism.

Archimedes water screw

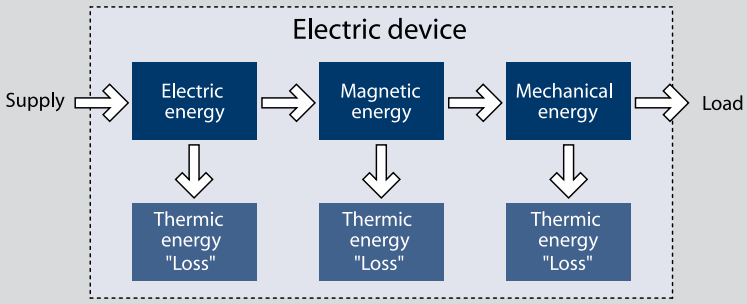

What motors do: energy conversion

IE3
GRUNDFOS

Chapter

1. Electrical motor basics 7

2. Single-phase motors 19

3. Motor torque and power 31

4. Standards for AC motors 47

5. Explosion-proof motors – ATEX 83

6. Motor protection 111

7. Motor bearings 133

8. Frequency converter operation 161

9. Installation 177

10. Starting methods 211

11. Maintenance 223

© Copyright 2015 GRUNDFOS Management A/S. All rights reserved.

Copyright law and international treaties protect this material. No part of this material may be reproduced in any form or by any means without prior written permission from GRUNDFOS Management A/S.

Disclaimer

All reasonable care has been taken to ensure the accuracy of the contents of this material, however GRUNDFOS Management A/S shall not be reliable for any loss whether direct, indirect, incidental or consequential arising out of the use of or reliance upon any of the content of the material.

GRUNDFOS
GRUNDFOS

1. Electric motor basics

Some basic motor concepts 8
- Magnetism 8
- Magnetic lines of flux 8
- Electromagnetism 8
- Rotation from magnetism 10
- Opposites attract 10

Reversing polarity with alternating current 11
- Alternating current 11
- The poles change 11
- Applied alternating current 12
- The rotor rotates 12

Induction 13
- Induced voltage 13

Operating principles 14

Stator 15

Rotor 16
- Asynchronous speed 16
- Slip 17

Some basic motor concepts

This section will look at how motors work. The objective is to provide basic information to serve as a background for more detailed studies. We will take a look at the concepts of magnetism, AC (alternating current), electromagnetism, motor construction, and torque.

Magnetism

All magnets share two characteristics: they attract metals such as iron and steel, and they will move to point north-south if nothing obstructs them. Another very important feature of magnets is that they all have a north pole and a south pole: unlike poles attract each other, whereas like poles repel each other.

Magnetic lines of flux

We can visualise the magnetic field – the invisible force that makes magnets behave the way they do – as lines of flux moving from the north pole to the south pole. In some cases, the north and south poles are not as easily identifiable as in the classic bar or horseshoe magnets. This is certainly the case with electromagnetism.

Electromagnetism

A magnetic field is created around an electrical conductor when an electric current is passed through it. This is known as electromagnetism, and the physical rules for ordinary magnetism also apply here. The magnetic field moves around the conductor.

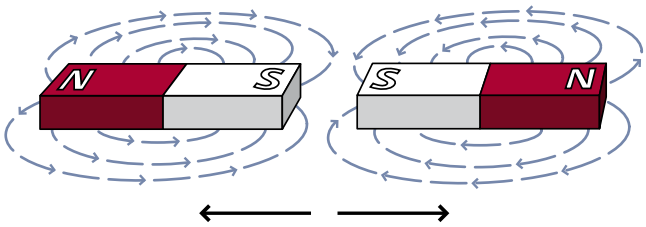

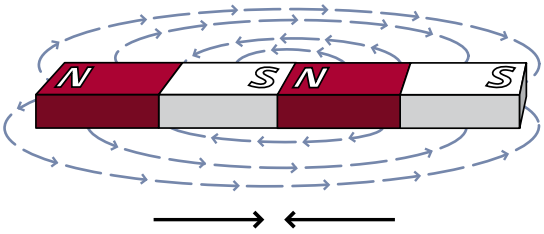

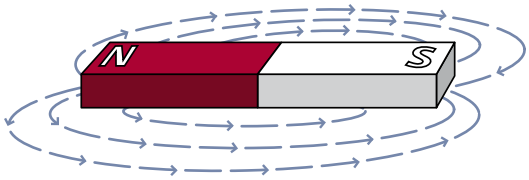

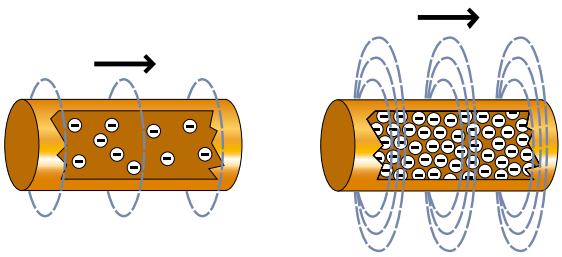

Magnetic field around a conductor.
The more current, the stronger the magnetic field

Some basic motor concepts

The magnetic field around electrical conductors can be strengthened by winding them into a coil around an iron core. When the wire is wound into a coil, all the flux lines produced by each turn of wire join up to form a single magnetic field around the coil.
The greater the number of turns of the coil, the greater the strength of the magnetic field. This field has the same characteristics as a natural magnetic field, and so also has a north and a south pole.
But before we dig any further into the world of magnetism, let us have a closer look at the main components of an electric motor: the stator and the rotor.

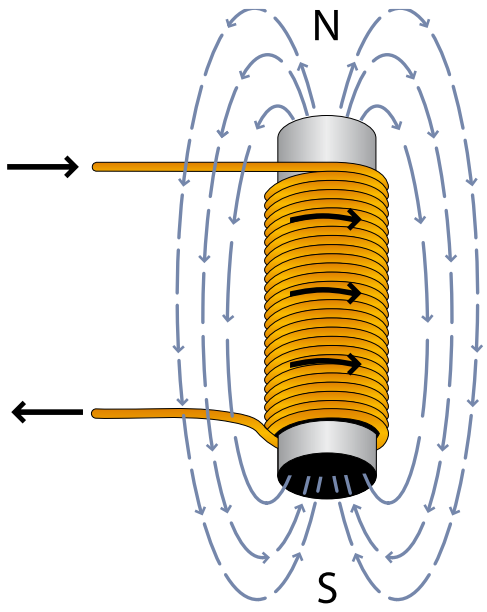

It possible to reverse the poles
by reversing the direction of the current

Rotor:
The rotating part of the motor, rotates with the motor shaft by moving with the magnetic field of the stator.

Stator:
The stator is the stationary electrical part of the motor. It contains a number of windings whose polarity is changed all the time when an alternating current (AC) is applied. This makes the combined magnetic field of the stator.

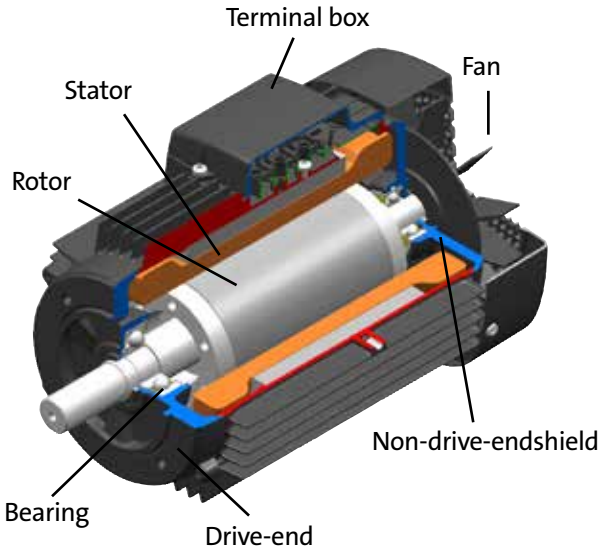

Electric motor

Rotation from magnetism

Quite apart from their strength, the advantage of having a magnetic field which is created by a current-carrying coil is that it makes it possible to reverse the poles of the magnet by reversing the direction of the current. This ability to reverse the poles is precisely what we use to create mechanical energy. What follows is a brief look at how this works.

Opposites attract

Like poles repel each other while unlike poles attract. Simply put, this fact is used to generate constant movement of the rotor by continuously changing the polarity in the stator. You could think of the rotor as a magnet which is capable of rotating. This will keep the rotor moving in one direction, and the movement is transferred to the motor shaft. In this way, magnetism is used to convert electrical energy into mechanical energy.

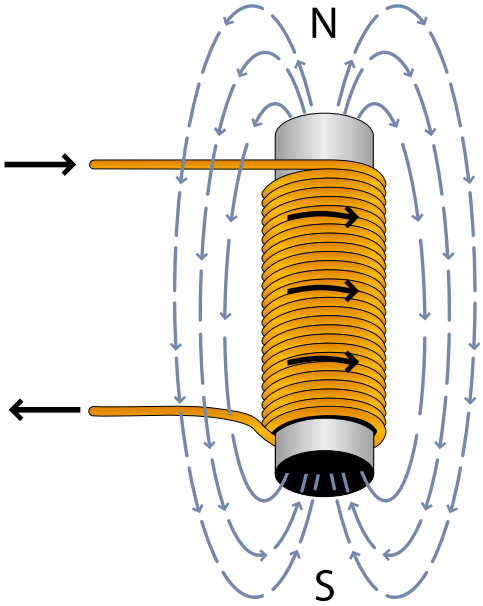

It possible to reverse the poles
by reversing the direction of the current

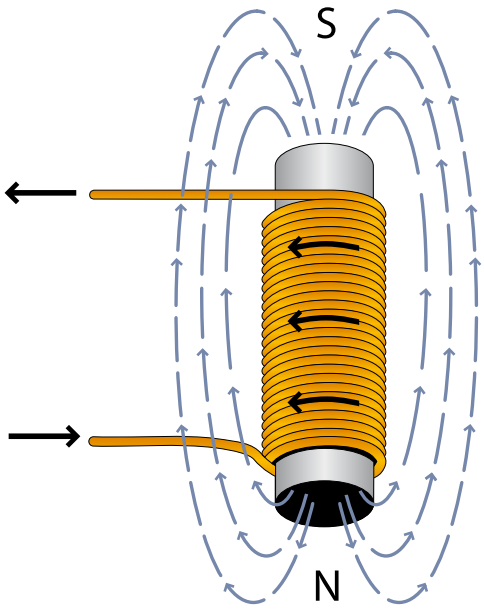

Reversing polarity with alternating current

Magnetic polarity is continuously reversed by means of alternating current, (AC). Later, we will see how the rotating magnet is replaced by the rotor by means of induction. Alternating current is important in this regard, so a brief presentation should be useful:

Alternating current

By alternating current, we mean an electrical current that reverses in intervals and has alternating positive and negative values.

A rotating magnetic field can be created by using three-phase power. This means that the stator is connected to an AC source which supplies three separate current flows (also known as phases), all of them applied to the same circuit. A complete cycle is defined as having 360 degrees, which means that each phase is different from the others by 120 electrical degrees. They are illustrated in the form of sinus curves such as those presented to the right.

The poles change

On the following pages we will explain how the rotor and the stator interact and thus make the motor turn. In order to illustrate this clearly, we have replaced the rotor by a magnet that turns and the stator by a stationary part with coils. The illustration on your right-hand side, should be considered as a two-pole three-phase motor. The phases are connected in pairs like in a real motor; phase 1 consisting of A1 and A2, phase 2 consisting of B1 and B2 and phase 3 consisting of C1 and C2. When current is applied to the stator coils, one coil becomes a north pole and the other becomes a south pole. So, if A1 is a north pole, A2 is a south pole. The principle we can derive from this is that when the current is reversed, the polarity of the poles is also reversed.

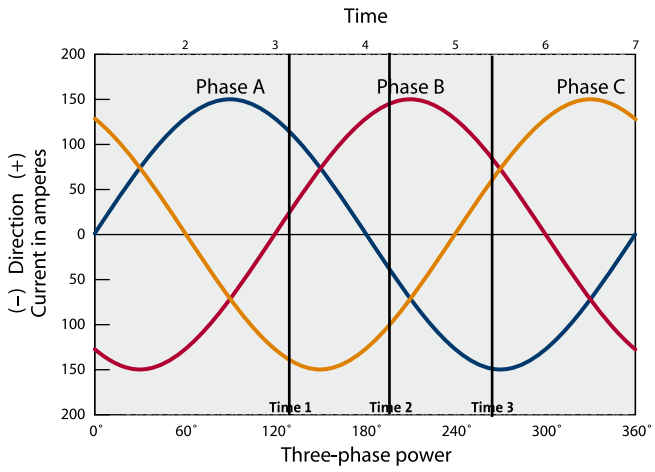

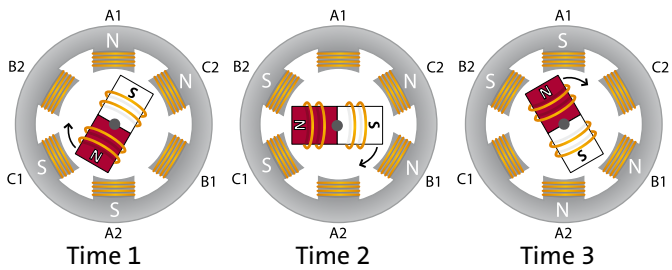

The stages of movement.

Three-phase AC
Three-phase power is a continuous series of overlapping alternating current (AC) voltages.

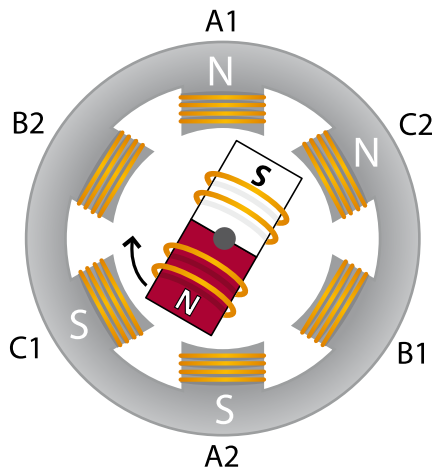

The rotating magnetic field on slow-motion

Reversing polarity with alternating current

Applied alternating current

The phase windings A, B and C are placed 120 degrees apart. The number of poles is determined by the number of times a phase winding appears. Here, each winding appears twice, which means that this is a two-pole stator. It follows, then, that if each phase winding appeared four times, it would be a four-pole stator and so on.

When power is applied to the phase windings, the motor starts running with different speeds depending on the number of poles.

The rotor rotates

The following pages deal with how the rotor rotates inside the stator. Again, we have replaced the rotor with a magnet. Of course, all of these changes in the magnetic field occur really fast, so we need a step-by-step breakdown of the course of events.

To the right, we see how the current in winding A1 creates a **north pole** at this particular point in time. The magnet moves to make its south pole line up with the stator's north pole.

Having begun its rotation the magnet will try to follow the rotating magnetic field of the stator. .

As the purpose of this process is to keep the magnet moving, the stator field will now change so that the process is continued. This maintains rotation in the same direction.

We have now begun to touch upon the matter of induction. The next section provides much more detail about this concept.

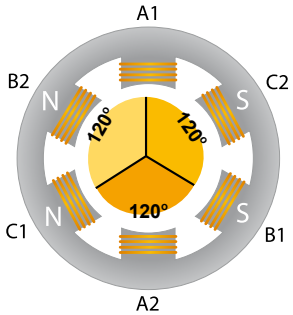

The phase windings A, B and C are placed 120 degrees apart.

The phase windings and number of poles

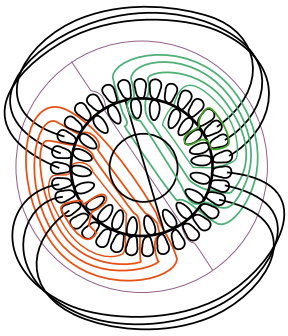

3-phase, 2-pole motor

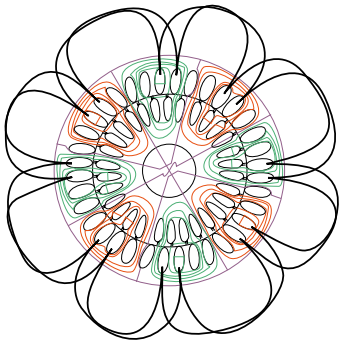

3-phase, 8-pole motor

When an AC supply is applied

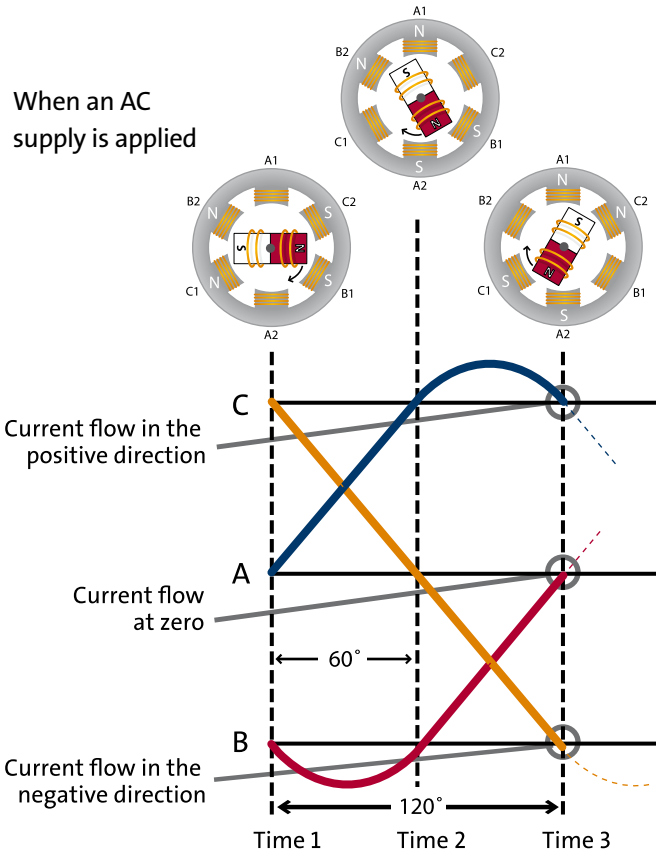

Induction

The previous sections have established how an ordinary magnet, would rotate inside a stator. Alternating current AC motors have rotors inside them, not ordinary magnets. Our analogy is not far off, however, the rotor is polarised. This is caused by **induction**, where current is induced in the rotor conductor bars. The rotor is then polarised due to electromagnetism.

Induced voltage

The rotor basically acts just like a magnet. When the motor is switched on, a current flows through the stator winding and creates an electromagnetic field that rotates and cuts across the rotor bars. This induce current in the rotor bars which then create a electromagnetic field around the rotor and a polarisation of the rotor.

In the previous section, we substituted a magnet for the rotor for the sake of simplicity. We can do the same with the stator. The rotor field does not appear out of thin air; it is also the result of induction. Induction is a natural phenomenon which happens when a conductor is moved through a magnetic field. The relative motion of the conductor and the magnetic field causes an electric current in the conductor; a so-called induced current flow. This induced current in the rotor creates a magnetic field around each rotor conductor bar. As the three-phase AC power supply makes the magnetic field of the stator rotate, the induced magnetic field of the rotor will follow this rotation. The rotor is connected to the motor shaft, so naturally the motor shaft will rotate with it. If, for example, the motor is connected to a pump, it will begin pumping.

This is why AC motors are often called AC induction motors or IM (induction motors).

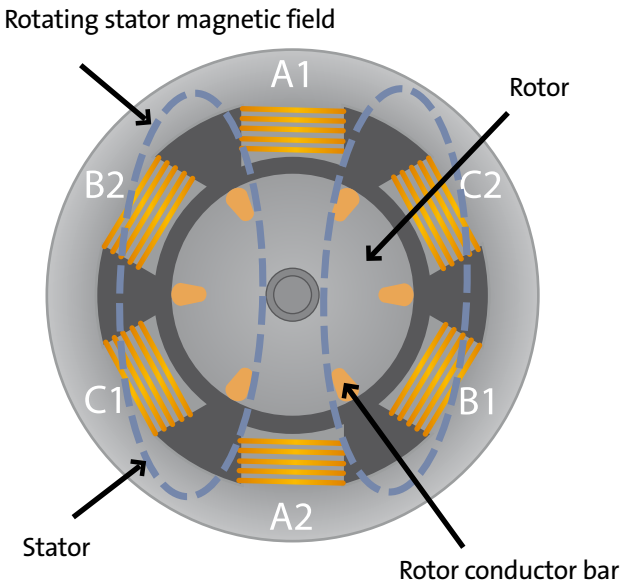

When power is applied to the stator, it generates an expanding magnetic field that cuts across the rotor conductor bars and indduce a rotor current

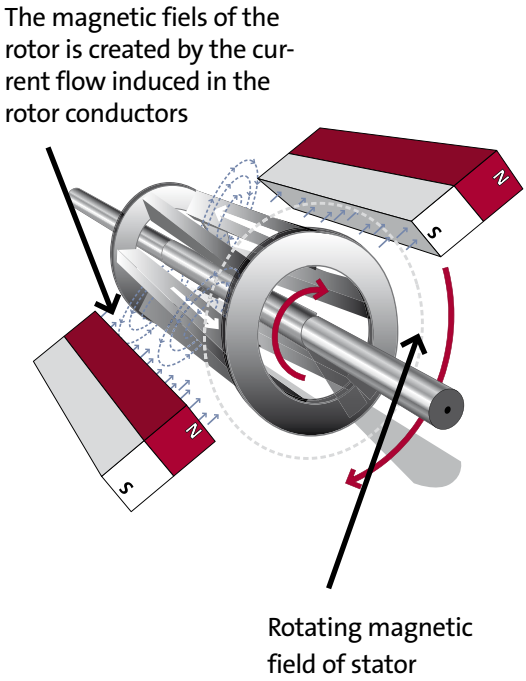

Operating principles

In real life AC induction motors do not consist of magnets but of a physical rotor and stator.

The currents in the stator windings are generated by the phase voltages, which drive the induction motor. These currents generate a rotating magnetic field, also referred to as stator field. The stator rotating magnetic field is determined by the winding currents and the number of phase windings.

The rotating magnetic field form the potential of the magnetic flux. The rotating magnetic field corresponds to electric voltage and the magnetic flux corresponds to electric current.

The stator rotating magnetic field rotates faster than the rotor to enable the induction of currents in the rotor conductor bars, thus creating a rotor magnetic field. The stator and rotor magnetic field generate their fluxes and these two fluxes will attract each other and create a torque, which makes the rotor rotate.

The operating principles of the induction motor are shown in the series of illustrations to your right.

Rotor and stator are thus, vital components in an AC induction motor. Stator and rotor are designed by sophisticated computer design programs. On the next pages, we will have a closer look at how stator and rotor are constructed.

Mode of operation (1 of 3): Stator flux vs. rotor speed

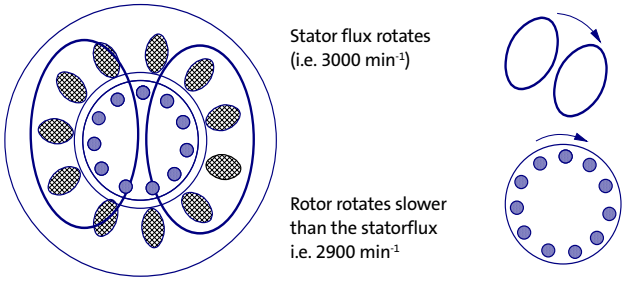

The rotating stator flux is caused by the rotating stator magnetic field which is formed by the currents in the different phase windings

Mode of operation (2 of 3): Generation of rotor flux

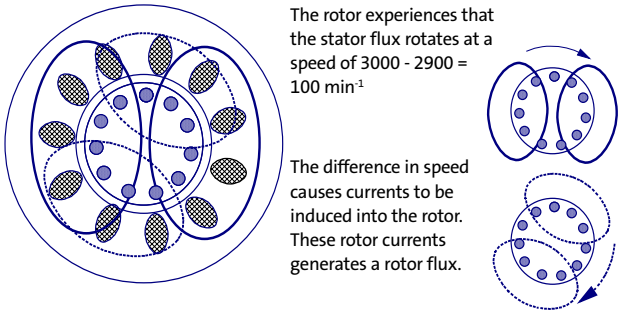

The rotor flux is rotating at a speed of 3000 min^{-1} (like the stator flux)

Mode of operation (3 of 3): Generation of torque

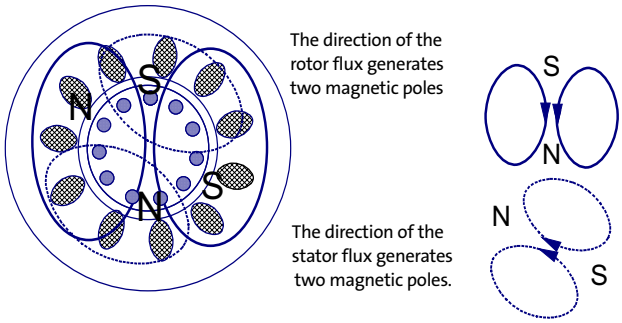

The attraction of the rotor magnetic north pole towards the stator south pole and vice versa generates a force between stator and rotor. This force constitutes the motor torque that makes the rotor rotate.

Stator

Stator: The stationary electrical part of the motor. It contains a number of windings whose polarity is changed all the time when an alternating current (AC) is applied. This makes the combined magnetic field of the stator rotate.

All stators are mounted in a frame or housing. The stator housing of Grundfos motors is mainly made from aluminium for motors up to 22 kW, while motors with higher outputs have cast-iron stator housings. The stator itself is mounted inside the stator housing. It consists of thin, stacked laminations that are wound with insulated wire. The core contains hundreds of these laminations. When power is applied, an alternating current flows through the windings, creating an electromagnetic field across the rotor bars. The alternating current (AC) makes the magnetic field rotate.

The stator insulation design is classified. This classifi-cation is defined in IEC 62114, which have different insulation classes (temperature classes) and temperature rises (ΔT). Grundfos motors are insulation class F but only temperature rise class B. Grundfos can manufacture 2-pole motors up to 11 kW and 4-pole motors up to 5.5 kW. The rest of the motor range is outsourced to subcontractors. Stators with two, four and six poles are the most commonly used in connection with pumps, because the speed determines the pressure and the flow. The stator can be designed to handle various voltages, frequencies and outputs and a varying number of poles.

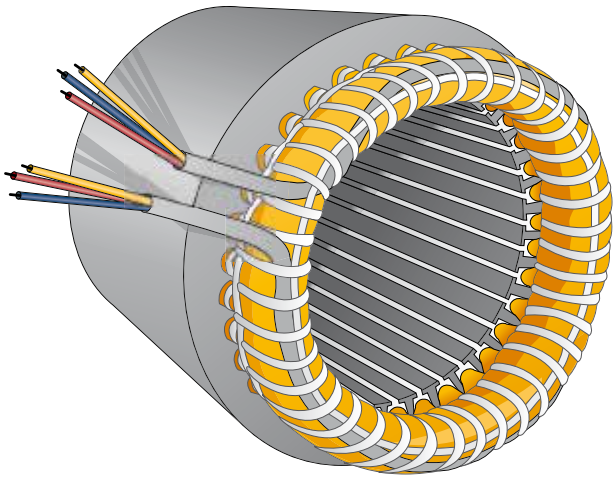

Stator

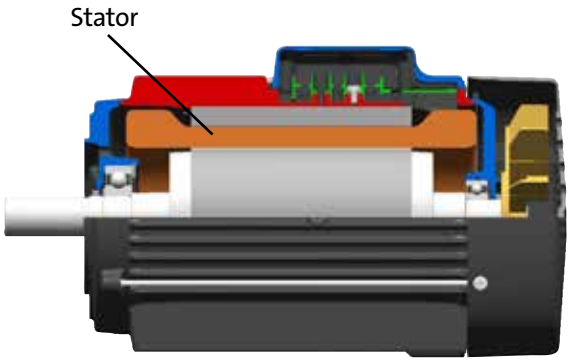

Rotor

Grundfos motors use so-called "squirrel cage" rotors, a name derived from their similarity to old-fashioned rodent exercise wheels. When the stator's moving magnetic field cuts across the rotor conductor bars, a current is produced. This current circulates through the bars and creates magnetic fields around each rotor bar. As the magnetic field in the stator keeps changing, so does the field in the rotor. This interaction is what causes the rotor to move.

Like the stator, the rotor is made of a lamination stack. Contrary to the stator, which is filled with copper wire, the rotor is filled with cast aluminium or silumin bars, that acts as conductors.

Asynchronous speed

In previous sections, we have seen why AC motors are also known as **induction motors** or **squirrel cage motors**. What follows will explain yet another name used for AC motors: **asynchronous motor**. This explanation involves the correlation between the number of poles and the revolutions made by the motor. If you have ever wondered about the designation "slip" in connection with asynchronous motors, all will be explained here.

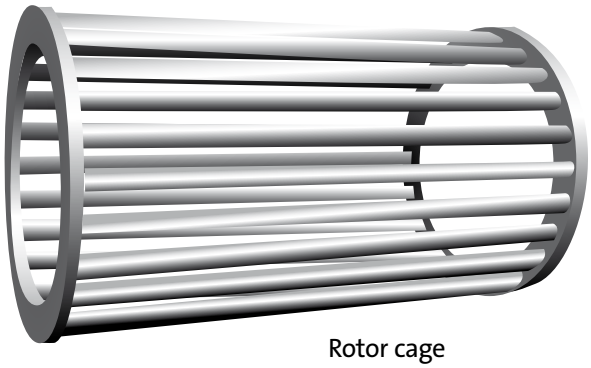

Rotor cage

Rotor lamination

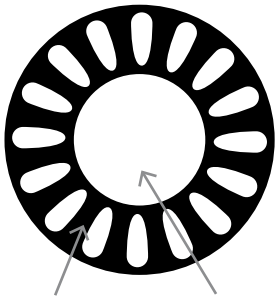

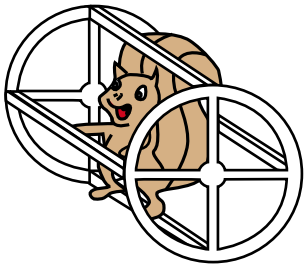

"Squirrel cage"

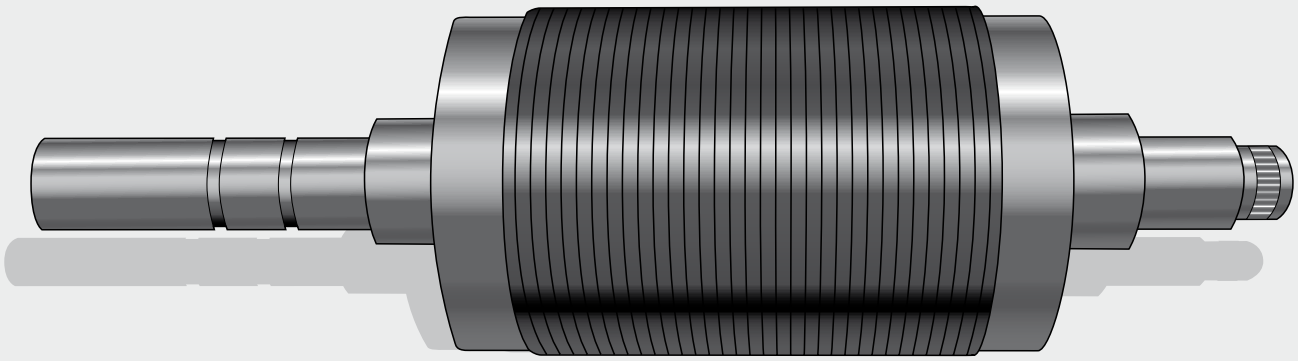

Rotor bars are made from aluminium in a lamination stack

First, we need to take yet another look at the rotation of the magnetic field. The speed of the rotating magnetic field is known as **synchronous speed** (N_s). Synchronous speed can be calculated as follows: 120 times the frequency (F), divided by the number of poles (P).

$$N_s = \frac{120F}{P}$$

If, for example, the frequency of the applied power is 50 Hz, the synchronous speed is 3000 min^{-1} for a 2-pole motor.

$$N_s = \frac{120 \cdot 50}{2}$$

$$N_s = 3000\ min^{-1}$$

The synchronous speeds decreases as the number of poles increases. The table below shows the synchronous speed associated with various numbers of poles.

No. of poles	Synchronous speed 50 Hz	Synchronous speed 60 Hz
2	3000	3600
4	1500	1800
6	1000	1200
8	750	900
12	500	600

Slip

So far, so good. But of course we already know that AC motors are known as **asynchronous** motors. This is because the rotor field does not follow the stator field in perfectly synchronous motion.

In AC motors, torque and speed is developed by the interaction between the rotor and the rotating magnetic field from the stator. The magnetic field around the rotor conductor bars will seek to line up with the magnetic field of the stator as earlier described. During actual operation, the rotor speed always lags behind the magnetic field of the stator. This allows the rotor's magnetic field to cut the stator's magnetic field and thereby produce torque. This difference in speed between rotor and stator fields, is called slip and is measured in %. Slip is a key factor and is necessary to produce torque. The greater the load - torque - the greater slip.

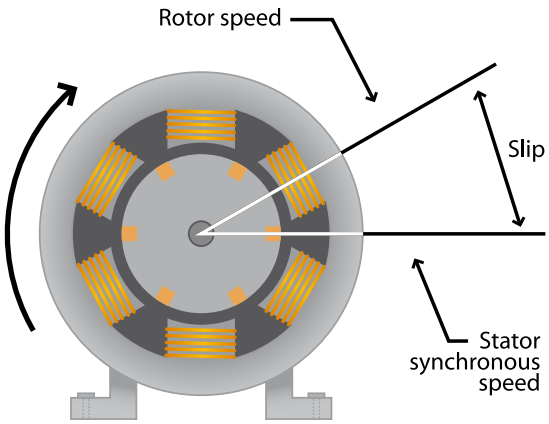

$$Slip = \frac{\text{Synchronous speed} - \text{rotor speed}}{\text{Synchronous speed}} \cdot 100\%$$

$$Slip = \frac{1500\ min^{1} - 1480\ min^{-1}}{1500\ min^{-1}} \cdot 100\%$$

$$Slip = 1{,}3\%$$

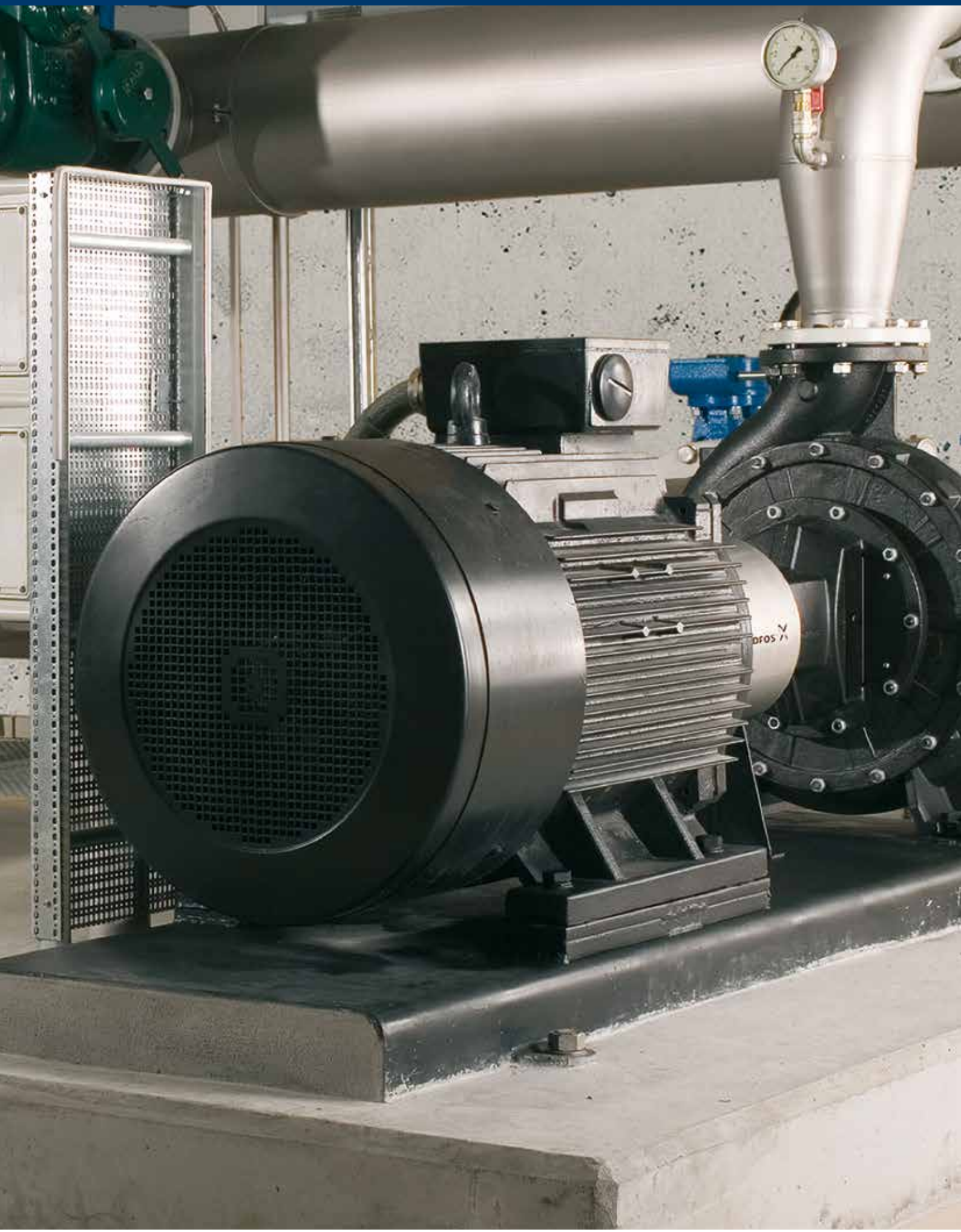

2. Single phase motors

Single-phase motors 20
Basic types of single-phase induction motors 21
Capacitor start/Induction run motors (CSIR) 22
Capacitor-start/Capacitor run motors (CSCR) 23
Resistance start/Induction run motors (RSIR) 24
Permanent-split capacitor motors (PSC) 25
Single-phase dual-voltage motors 26
Special conditions 27
Voltage issues 28
Voltage variants 28
Summary 29

Single-phase motors

Often focus is on basic knowledge of three-phase motors. This is partly because Grundfos sells far more three-phase motors than single-phase motors. Grundfos does, however, also manufacture single-phase motors up to 2.2 kw 2-pole and 1.5 kW 4-pole. Single-phase motors work on the same principles as three-phase motors, but have lower starting torques and need help to start. The various motor types are defined by the starting method used.

A standard single-phase stator has two windings placed at an angle of 90° to each other. One of these windings is known as the main winding, while the other is called the auxiliary winding or starting winding. Depending on the number of poles, each winding may be distributed across several subcoils.

Shown here is an example of a two-pole, single-phase winding with four subcoils in the main winding and two subcoils in the auxiliary winding.

It should be remembered that designing a single-phase motor will always be a matter of compromise. The design of any given motor depends on what is most important for the individual task. This means that all motors are designed according to the relative importance of e.g. efficiency, torque, duty cycle etc. Single-phase motors CSIR and RSIR can be very noisy due to a pulsating field, compared to “two-phase” PSC and CSCR motors which have much more silent running characteristics, because they use a capacitor during normal operation. The “run-capacitor” balances the motor which results in more smooth operation.

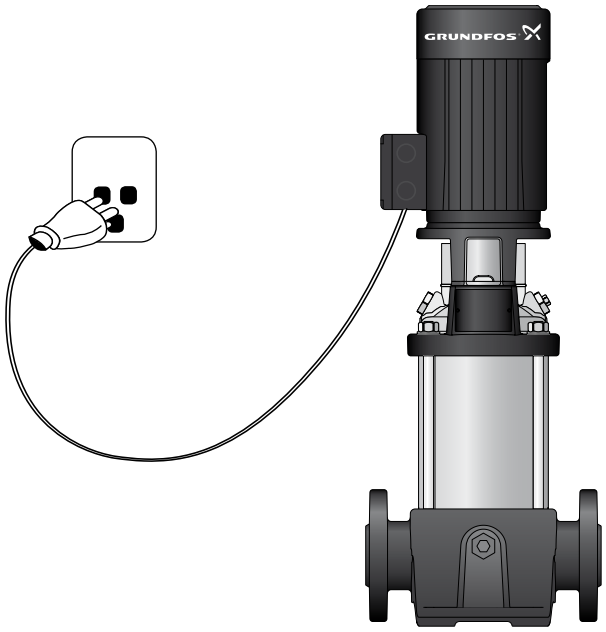

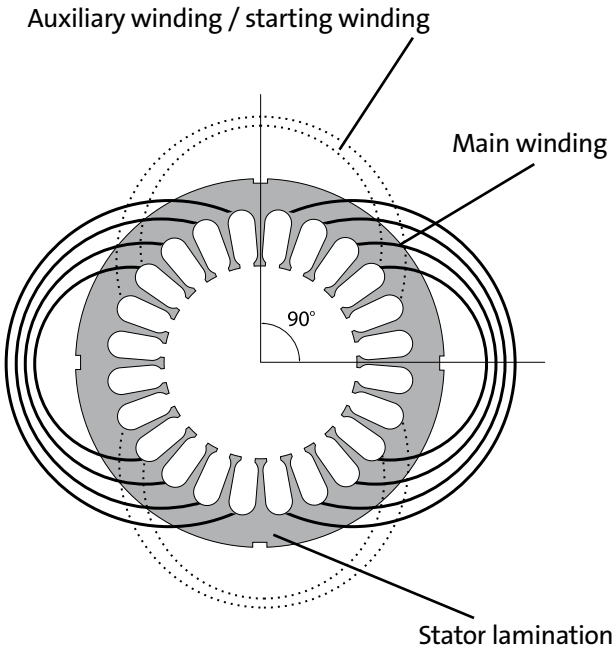

An example of a 2-pole, single-phase winding with four subcoils in the main winding and two subcoils in the auxiliary winding

Basic types of single-phase induction motors

Home appliances and low-power business appliances use single-phase AC supply, and in some places three-phase supply is not available. This is why single-phase AC motors are widespread, particularly in the USA. AC motors are often the first choice because of their durable construction, maintenance-free operation, and low cost.

As the name would suggest, a single-phase induction motor operates on the principle of induction - which is also true for three-phase motors. There are, however, differences: single-phase motors are normally operated on 110-240 volt AC, and the stator field does not rotate. Instead, the poles alternate as the single sine-wave voltage swings from positive to negative.

In single-phase motors, the stator field is permanently lined up in one direction, and the poles change their position once each cycle. This means that a single-phase induction motor will run once started, but cannot start itself.

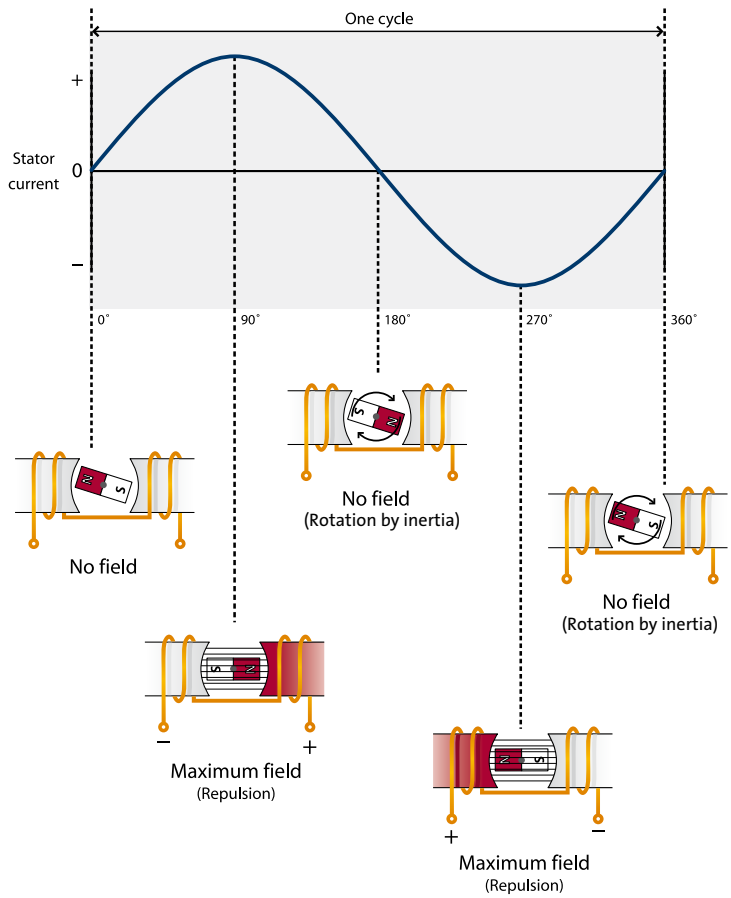

The poles change position once in each cycle

Basic types of single-phase induction motors

Theoretically, a single-phase motor could be started by spinning the motor mechanically and applying power immediately. In actual practice, however, all motors use automatic starting of some sort.
Single-phase induction motors are often known by the names of the starting method used. There are four basic types: Capacitor start/Induction run (CSIR), Capacitor start/Capacitor run motors (CSCR), Resistance start/ Induction run (RSIR) and Permanent-split capacitor motor (PSC).

The figure below shows the typical torque/speed curves for the four basic types of single-phase AC motors.

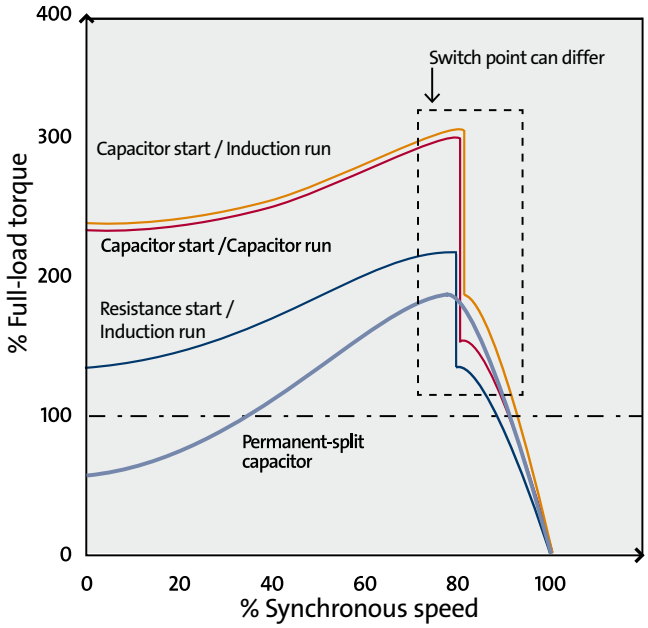

Principle sketch: torque/speed curves for the four major types of single-phase AC motors

Capacitor start/Induction run motors (CSIR)

Also known as CSIR (Capacitor start/Induction run) motors, this is the largest group of single-phase motors.

CSIR motors are available in sizes ranging from fractional to 1.1 kW. Capacitor start motors feature a special capacitor in a series with the starting winding. The capacitor causes a slight delay between the current in the starting winding and main winding. This cause a delay of the magnetisation of the starting winding, which result in a rotating field effective in producing torque. As the motor gains speed and approaches running speed, the starting switch opens. The motor will then run in the normal induction motor mode. The starting switch can be a centrifugal or electronic switch.

CSIR motors have a relatively high starting torque, between 50 to 250 per cent of the full-load torque. This makes them a good single-phase motor choice for loads that are difficult to start, e.g. for conveyors, air compressors, and refrigeration compressors.

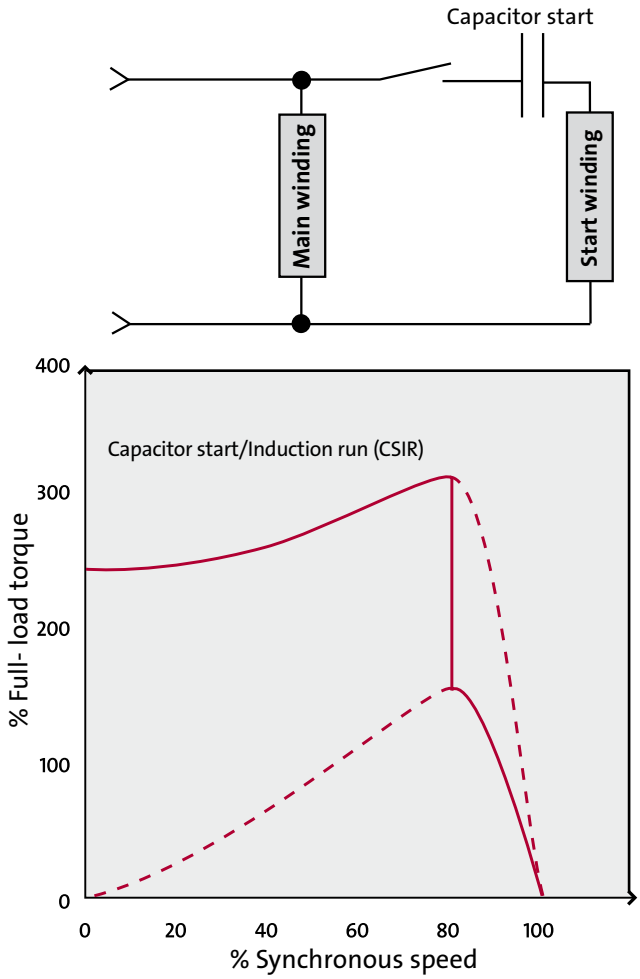

CSIR motor. Schematic diagram and torque/speed curve

Capacitor-start/Capacitor run motors (CSCR)

Known as a CSCR motor for short, this type of motor combines the best features of the Capacitor-start/Induction run motor and the permanent-split capacitor motor. Even though their construction makes them somewhat more expensive than other single-phase motor types, they are the perfect choice for demanding applications. A CSCR motor has a start-type capacitor in series with the starting winding, just like the capacitor-start motor. This provides high starting torque.

CSCR motors also resemble Permanent-split capacitor (PSC) motors insofar as they have a run-type capacitor which is in series with the starting winding once the start capacitor is switched out of the circuit. This means that the motor can handle high breakdown or overload torque.

CSCR motors can be designed for lower full-load currents and higher efficiency. One of the advantages of this feature is that it allows the motor to operate at smaller temperature rises than other, similar single-phase motors.

CSCR motors are the most powerful single-phase motors and can be used for quite demanding applications, e.g. high-pressure water pumps and vacuum pumps and other high-torque applications which require 1.1 to 11 kW.

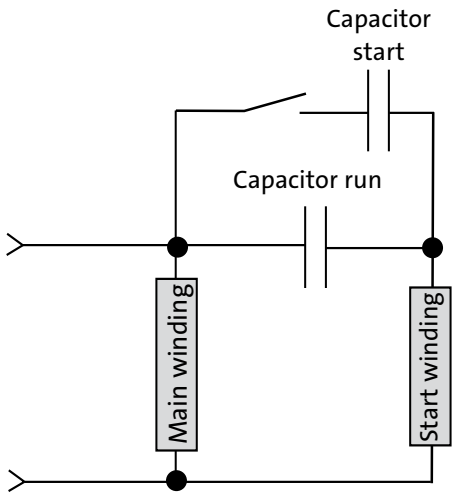

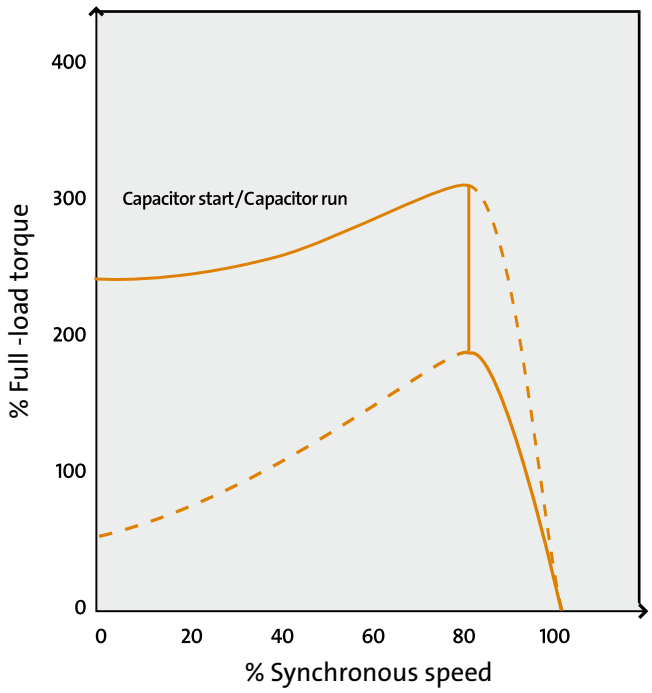

CSCR motor. Schematic diagram and torque/speed curve

Basic types of single-phase induction motors

Resistance start/Induction run motors (RSIR)

This motor type is also referred to as Split-phase motors. They are usually cheaper than other single-phase motor types used by industries, but also have some limitations in terms of performance.

The starting device of RSIR motors comprises two separate windings in the stator. One of these is used exclusively for starting and is wound with a smaller wire size with higher electrical resistance than the main windings. This causes a time delay for the rotating field, which in turn makes the motor start. A centrifugal or electronic switch disconnects the starting winding when the motor reaches approximately 75% of the rated speed. The motor will then continue running according to standard induction motor principles.

As mentioned above, certain limitations apply to RSIR motors. Their starting torques are low, often between 50 to 150 per cent of rated load. The motor also develops high starting currents, approximately 700 to 1000 % of rated nominal current. As a result, overly long starting times will cause the starting winding to overheat and fail. Of course, all this means that this motor type should not be used in situations where high starting torques are required.

RSIR motors are designed for single voltage, which naturally limits the range of potential applications. Their maximum running torques range from 100 to 250% of normal. It should also be mentioned that thermal protection is difficult because it is hard to find a protector with trip-off time fast enough to prevent the starting winding from burning out.

RSIR motors are well suited for small grinders, fans, and other applications with low starting torque and power needs from 0.06 kW to 0.25 kW. They are not suitable for applications which require high torques or high cycle rates.

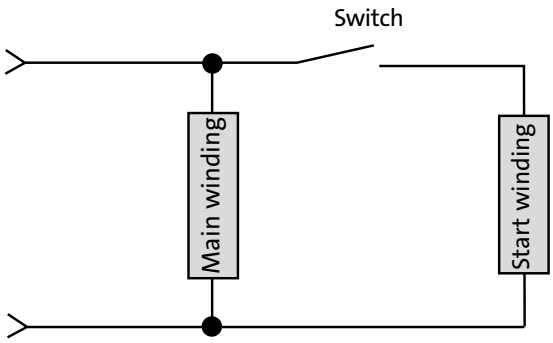

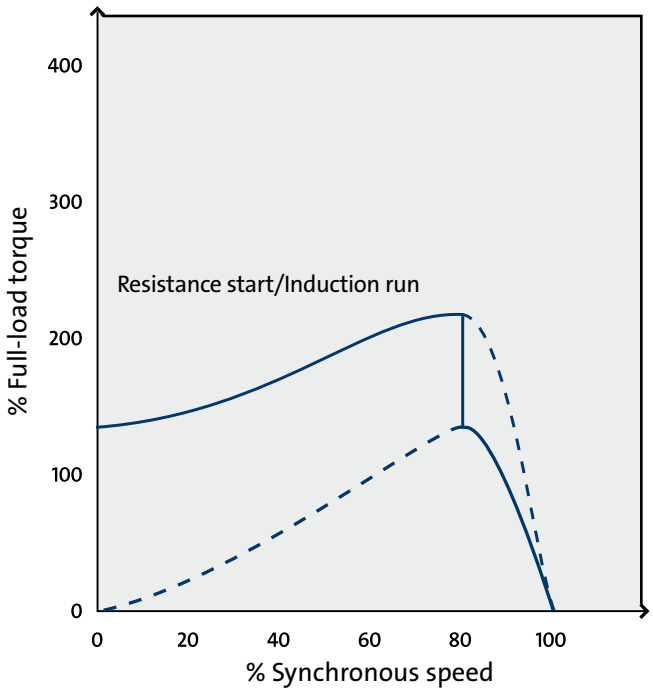

RSIR motor. Schematic diagram and torque/speed curve

Permanent-split capacitor motors (PSC)

As the name suggests, permanent-split capacitor motors (PSC motors) have a run-type capacitor which is left permanently in series with the starting winding during operation. This is to say that they do not have a starting switch or a capacitor which is used only for starting. Thus, the starting winding becomes an auxiliary winding when the motor is up to running speed.

The design of PSC motors means that they cannot provide the same initial boost as motors with separate capacitors. Their starting torques are quite low, between 30 to 90% of rated load, so they cannot be used for applications which are hard to start. This is offset by their low starting currents - usually less than 200% of rated load current - which makes them the perfect choice for applications with high cycle rates.

Permanent-split capacitor motors offer many benefits. Their running performance and speed can be tailored to meet specific needs, and they can be designed for optimum efficiency and high power factor at rated load. As they need no starting mechanism, they can be reversed easily. Finally, they are the most reliable single-phase motors available. These advantages are the reason why Grundfos uses PSC single-phase motors as standard for all applications up to 2.2 kw 2-pole and 1.5 kW 4-pole.

Permanent-split capacitor motors can be used for many different applications, depending on their design. Low-inertia loads such as fans and pumps would be a common example.

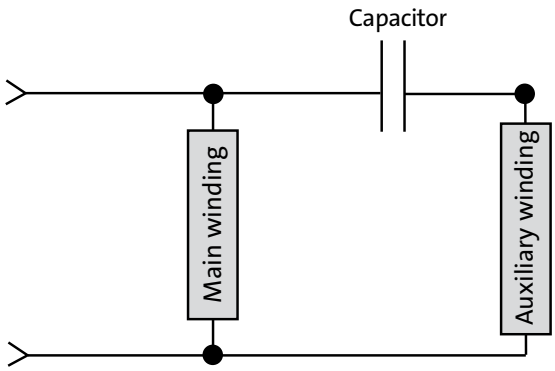

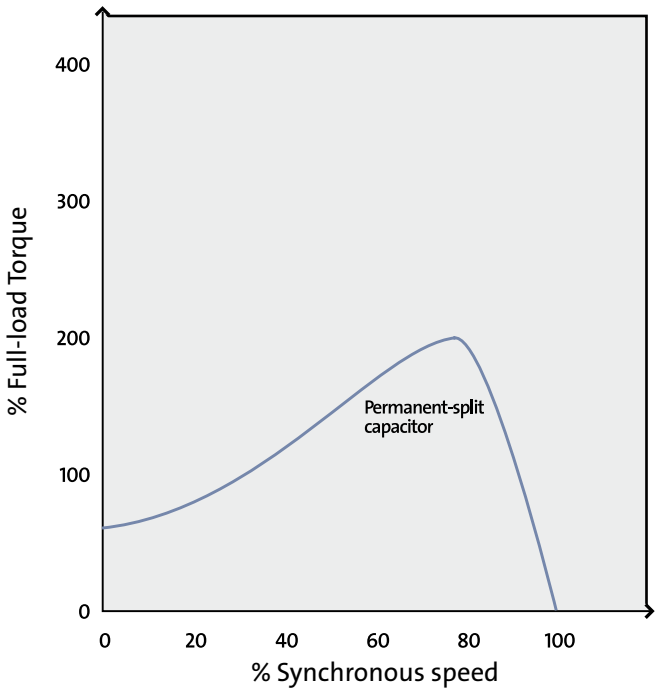

The PSC motor. Schematic diagram and torque/speed curve

Single-phase dual-voltage motors

Single-phase dual-voltage motors comprise two main windings, a starting winding, and a run capacitor. They are widely used in the USA, where the single-phase supply is either 1 x 115 V/60 Hz or 1 x 230 V/60 Hz. With the right connection, this motor type can be used for both supplies.

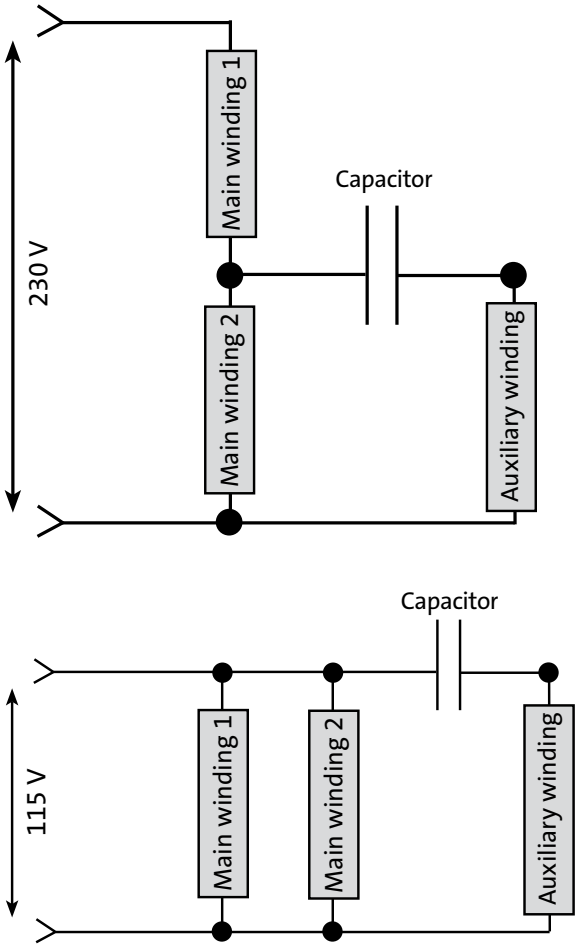

Dual-voltage motor. Connections to high and low voltages

Special conditions

A number of special conditions apply to single-phase motors compared to three-phase motors. Single-phase motors should never run idle because they become very warm at small loads, therefore it is not recommended to run the motor less than 25% of full-load.

PSC- and CSCR-motors have a symmetrical/circular rotating field at one load-application point, which of course means that the rotating field is asymmetrical/elliptic at all other load-application points. When the motor runs with an asymmetrical rotating field, the current in one or both windings may be bigger than the mains current. These currents cause a loss, and so one or both windings (which is often seen in case of no load) will become too warm, even though the mains current is relatively small. See the examples to the right.

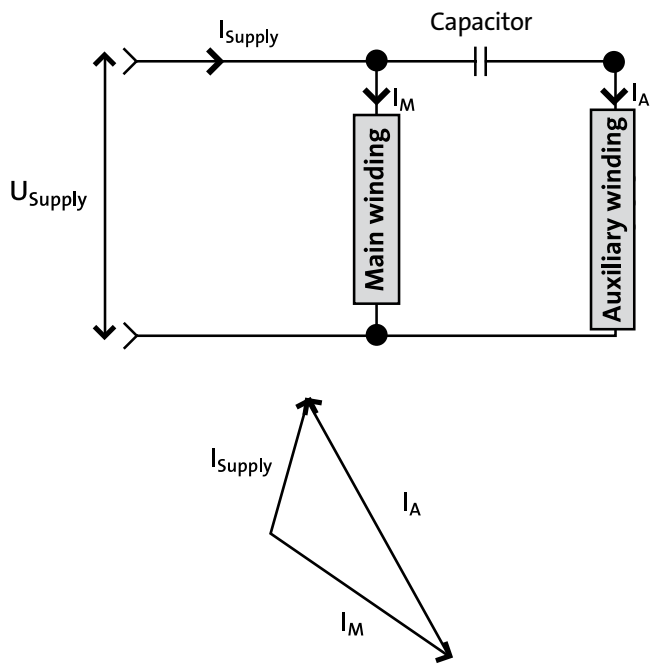

Example of asymmetrical operation, where the current in the two phases is bigger than the mains current.

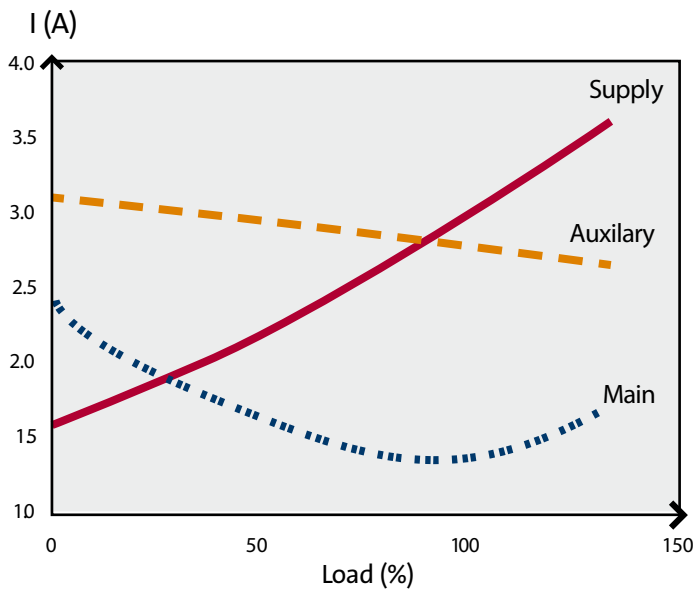

Example of run of currents as a function of the load. Please note that in the operating and starting phases the currents are bigger than the mains current at 0% load.

Voltage issues

It is important to be aware that voltages can be higher than the mains voltage inside the motor. This is also true for symmetrical operation. See the example to the right.

Voltage variants

It should be noticed that single-phase motors cannot usually be used for as big voltage intervals as the three-phase motors. Thus, it may be necessary to produce variants that can handle alternative voltages. This will involve design changes such as alternative windings and different capacitor sizes. In theory, the size of the capacitor for a different mains voltage (same frequency) should be equal to the square of the voltage ratio:

C = Capacitor
U = Voltage

$$\frac{C_2}{C_1} = \left(\frac{U_1}{U_2}\right)^2$$

Thus, if a motor for a 230 V mains applies a 25µF/400 V capacitor, the motor variant for the 115 V mains will need to apply 100 µF marked with a lower voltage, e.g. 200 V.

$$\frac{C_2}{C_1} = \left(\frac{U_1}{U_2}\right)^2 \Rightarrow C_2 = C_1 \cdot \left(\frac{U_1}{U_2}\right)^2 \Rightarrow C_2 = 25\mu F \cdot \left(\frac{230V}{115V}\right)^2 = 100\mu F$$

In actual practice, cost and space considerations may make it necessary to select a smaller capacitor, e.g. 60µF. In such cases, the windings must be adapted to suit the relevant capacitor. It is important to be aware that the motor's performance will not be as good as with 100µF - for example, the locked-rotor torque will be lower.

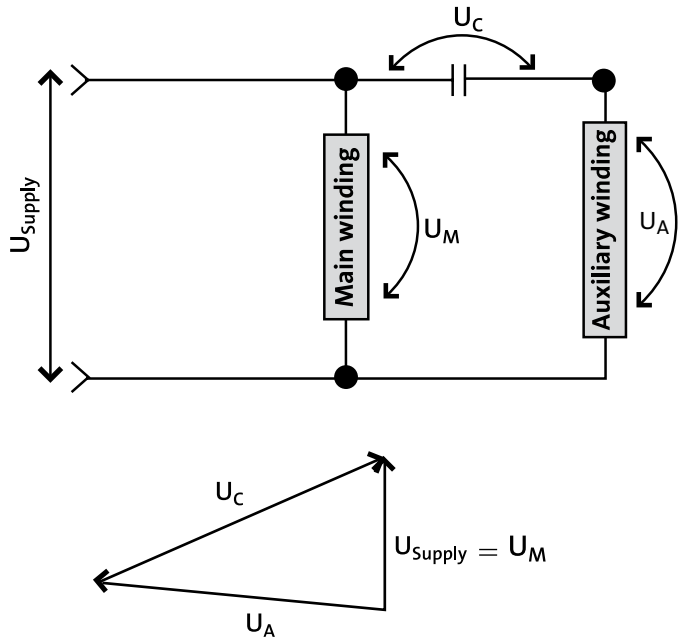

Example of voltage internally in the 1-phase motor.
At U_{supply} = 230 V voltages may be
U_c =370 V and U_A = 290 V

Summary

As we have seen, single-phase motors work according to the same principles as three-phase motors. They do, however, have lower starting torques and lower voltages (110-240V) than three-phase motors. Moreover, single-phase motors need help to start, a fact which gives rise to the different motor types. The most common single-phase motor supplied by Grundfos is the permanent-split capacitor motor; the reasons being that it requires the least maintenance and that pumps do not require very large starting torques.

Single-phase motors should not run idle, in fact, many of them should not run at less than 25 per cent loads, as this will cause temperatures to rise inside the motor, which can lead to breakdowns.

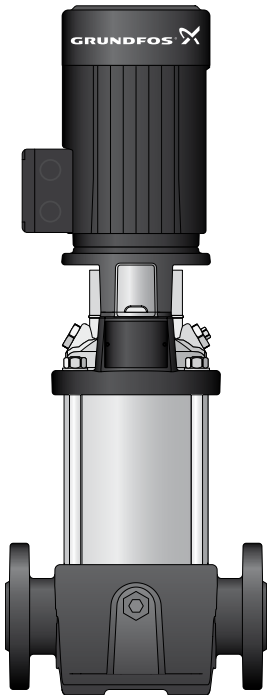

CR 64
CR 64

3. Motor torque and power

Motor power and torque 32
Work and power 33
Where does torque and speed come from? 35
Consumed power 36
Practical application 37
- Starting torque (ST) / Locked-rotor torque (LRT): 38
- Pull-up torque (PUT): 38
- Breakdown torque (BT): 38
- Full-load torque (FLT): 38

Pump loads and load types 39
- Constant power 39
- Constant torque 39
- Variable torque and power 39

Matching motors and loads 42
Run-up time 43
Number of starts per hour 44
Power and efficiency (eta) 45
Matching made easy 45

Motor power and torque

This chapter will address the concept of torque: what it is, why it is necessary, etc. We will also look at the load type relevant to pump solutions and at how motors and pump loads are matched.

Have you ever tried turning the shaft of an empty pump with your hand? Imagine that you are turning it while the pump is full of water. You will find that this requires more effort on your part to produce the required torque.

Now imagine that you had to turn the pump for several hours. You would get tired sooner if you had to work the pump while it is full of water, and you would feel that you had to expend more energy over the same period of time than if the pump had been empty. This observation is absolutely correct: you need greater power, which is a measure of energy spent over time. The normal rating of a standard motor is kW.

This is why we will look at torque and power in this chapter.

Torque (T) is the product of force and radius. In Europe, it is measured in Nm.

Torque = Force x Radius (T = F • r)

As you can see from this formula, the torque increases if either the force or the radius - or both - are increased. If, for example, we apply 10 N of force, equal to 1 kg due to gravity, using a lever distance (radius) of 1 m on a shaft the resulting torque would be 10 Nm. If we increase the force to 20 N or 2 kg, the torque would be 20 Nm. Similarly, the torque would also be 20 Nm if the rod - and hence the radius - was 2 m in length in stead of 1 m and the force 10 N. Of course, this also means that a torque of 10 Nm with a radius of 0.5 m would result in a force of 20 N.

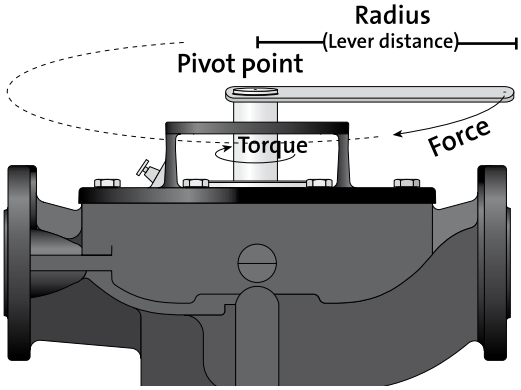

Torque is a turning or twisting force which makes a given object rotate. For example, when a force is applied to the end of a shaft, this creates a turning effect or torque at the pivot point

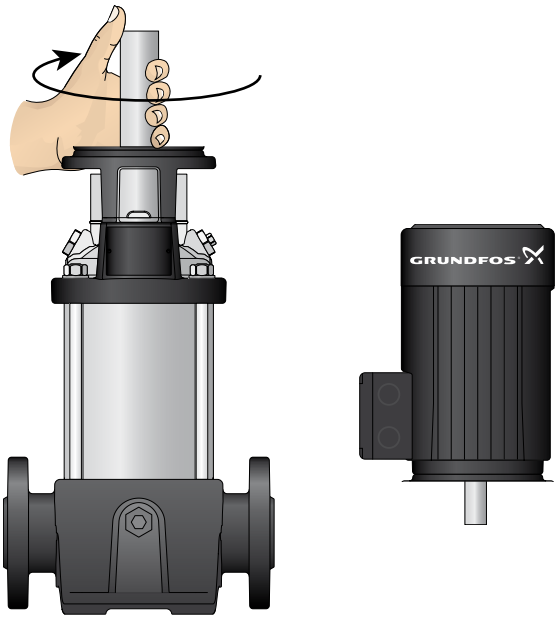

Torque = Force X Radius

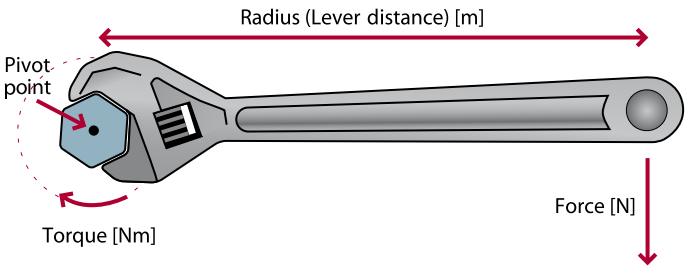

Work and power

Let us now turn our attention to the concept of "work", which has a very specific meaning in this context. Work is carried out whenever a force - any force - causes motion. Work equals force times distance. For linear movement, power is expressed as work at a given point in time.
When it comes to rotation, power is expressed as torque (T) times rotating speed (ω).

$$\text{Power} = T \cdot \omega$$

The speed of a rotating object is determined by measuring the time it takes for a given point on the rotating object to make a complete revolution from its starting point. This value is generally expressed as revolutions per minute min^{-1} or RPM. If, for example, an object makes 10 complete revolutions in one minute, it has a speed of 10 min^{-1} which also is 10 RPM.

So, rotational speed is measured as revolutions per minute, that is min^{-1}.
We use the following formulas in day-to-day operation to ensure that units are correct.

$$\text{Power} = \frac{\text{Torque} \cdot \text{speed}}{\text{Constant}}$$

$$\text{kW} = \frac{\text{Nm} \cdot \text{min}^{-1}}{9550}$$

$$\text{Nm} = 9550 \cdot \frac{\text{kW}}{\text{min}^{-1}}$$

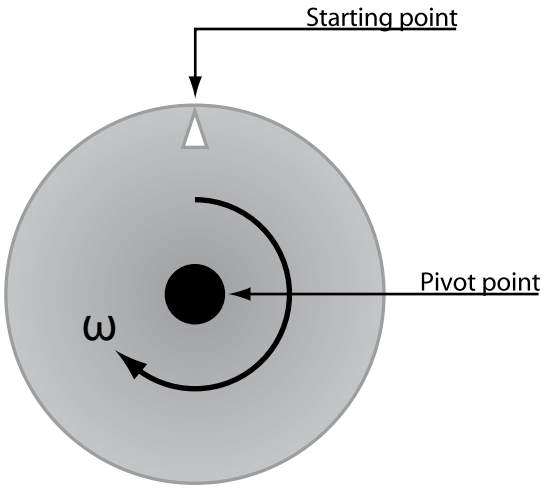

Rotational speed

Work and power

For the sake of illustration, let us look at two different motors to examine the relationship between power, torque, and speed in more detail. Even though the torque and speeds of motors vary considerably, their power may well be the same. We could, for example, have a two-pole motor (which features 3000 min^{-1}) and a four-pole motor (featuring 1500 min^{-1}). Both motors are 3.0 kW motors, but their torques are different.

$$T_{2pole} = \frac{3}{3000} \cdot 9550 = 9.55 \text{ Nm}$$

$$T_{4pole} = \frac{3}{1500} \cdot 9550 = 19.1 \text{ Nm}$$

Thus, a four-pole motor has twice the torque of a two-pole motor with the same power.

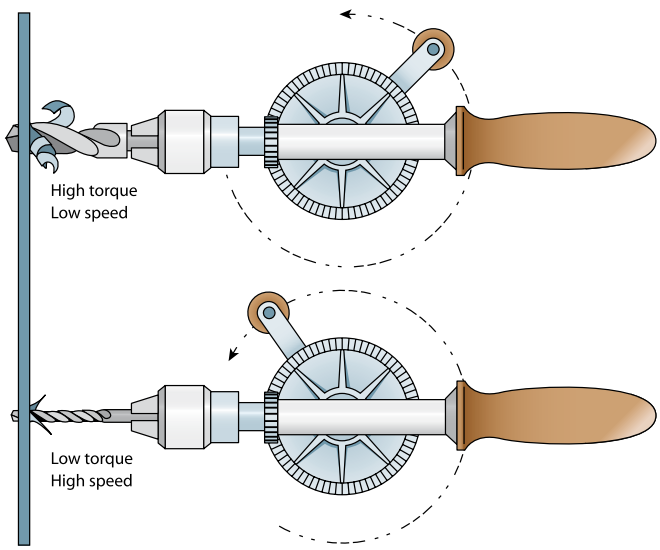

Same power but different torque

Where does torque and speed come from?

Now that we have considered the basics of torque and speed, we should look at how it is created in the real world – i.e. when you need the motor to power your pumps.

In AC motors, torque and speed are developed by the interaction between the rotor and the rotating magnetic field. The magnetic field around the rotor conductor bars will seek to line up with the magnetic field of the stator. During actual operation, the rotor speed always lags behind the magnetic field. This allows the rotor's magnetic field to cut the stator's magnetic field and thereby follow it and produce torque. This difference in speed between rotor and stator, measured in %, is called **slip** speed. Slip is a key factor and is necessary to produce torque. The greater the load a motor has to handle, the greater the slip.

With this in mind, let us have a look at some of the formulae behind this. The torque of an AC induction motor depends on the strength of the magnetic fields of the rotor and stator, as well as on the phase relationship between those fields.The relation is shown in the following formula:

Torque = constant · strength of the magnetic field · rotor current

The force of a magnetic field depends primarily on the design of the stator and the materials that the stator is made of. However, the voltage and the frequency play an important role as well. The relation between voltage and torque is square.Thus, when the applied voltage drops 2%, consequently the torque drops 4%.

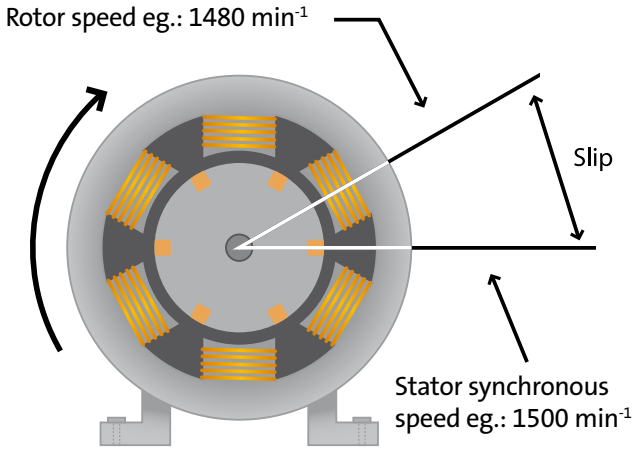

Slip is a key factor and is necessary to produce torque.

$$\text{Slip} = \frac{\text{Synchronous speed} - \text{rotor speed}}{\text{Synchronous speed}} \cdot 100\%$$

$$\text{Slip} = \frac{1500\ \text{min}^{-1} - 1480\ \text{min}^{-1}}{1500\ \text{min}^{-1}} \cdot 100\%$$

$$\text{Slip} = 1.3\%$$

$$\left(\frac{\text{Voltage}_2}{\text{Voltage}_1}\right)^2 = \frac{\text{Torque}_2}{\text{Torque}_1}$$

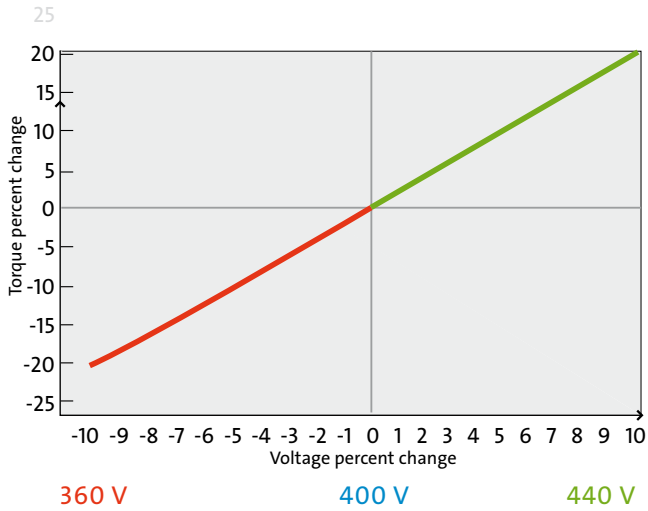

Torque change versus Voltage change

Consumed power

All of this goes to show that torque and speed – i.e. power – can be linked with the AC theory: the rotor current is induced via the power supply connected to the motor. and the magnetic field is partly created by the voltage. It is possible to calculate the power input when we know the details about the motor's power supply, i.e. voltage, power factor absorbed current and efficiency.

In Europe, shaft power is usually measured in kilowatts. In the USA, however, shaft power is measured in terms of horsepower (HP).

Should you need to convert horsepower into kilowatts, simply multiply the relevant figure (in horsepower) by 0.746. For example, 20 HP equals (20 • 0.746) = 14.92 KW.

Conversely, kilowatts can be converted to horsepower by multiplying the number of kilowatts by 1.341. This means that 15 KW equals 20.11 HP.

Grundfos motors for the European and Asian markets are rated in kW, whereas motors for the US market are rated in HP.

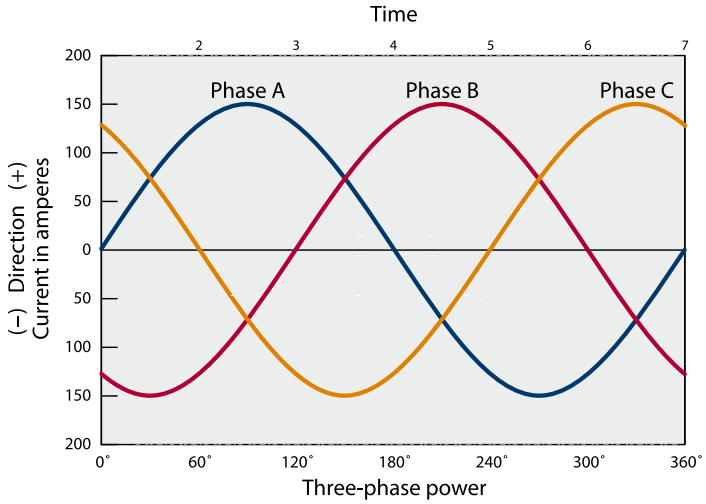

Consumed power (P_1)

Single-phase kW = $\frac{U \cdot I \cdot \cos \cdot \varphi}{1000}$

Three-phase kW = $\frac{U \cdot I \cdot \cos \cdot \varphi \cdot \sqrt{3}}{1000}$

Shaft power (P_2)

Single-phase kW = $\frac{U \cdot I \cdot \cos \cdot \varphi \cdot \eta_{motor}}{1000}$

Three-phase kW = $\frac{U \cdot I \cdot \cos \cdot \varphi \cdot \sqrt{3} \cdot \eta_{motor}}{1000}$

Practical application

So what have we discussed until now. Well, briefly put, we have seen that the turning force applied to a pump is **torque**, not power.

> **Power** [kW or HP] blends **torque** with **speed** to determine the total amount of work to be carried out within a given time span.

We also looked at the correlation between torque, power, and speed and the link to electric voltages and power. This link is also evidents on Grundfos motors. Grundfos motors have been rated for the same power at both 50 and 60 Hz. This entail a drop in torque when 60 Hz is applied: 60 Hz entails a 20% increase in revolutions, which results in a 20% drop in torque. While many manufacturers choose to maintain constant torque from 50 Hz to 60 Hz and mark up the power at 60 Hz, Grundfos has chosen to maintain constant torque. This has been done in order to be able to keep a wide voltage interval in both 50 Hz and 60 Hz covering many different mains voltages around the world, e.g. 50 Hz: 380 - 415 V D / 60 Hz: 380 - 480 V D.

Before moving on to describe the relationship between pump loads and the motor, we should start by taking a look at how motor torque is normally illustrated.

The illustration shows a typical torque/speed curve. For those unfamiliar with torque terminology, the following brief explanations may be helpful. Here, we provide an account of the various terms used to describe the torque curve of an AC motor.

Same power at 50 Hz and 60 Hz

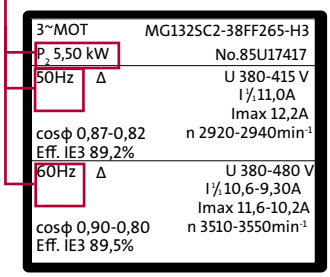

Grundfos motors are rated for the same power at both 50 and 60 Hz

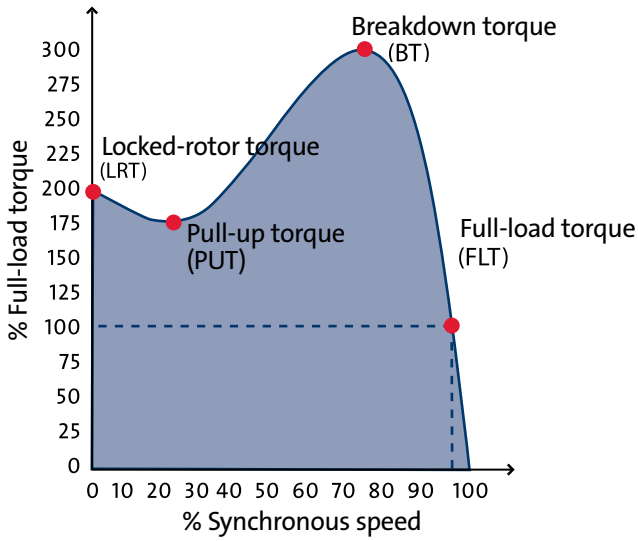

Torque/speed curve for an AC motor

Starting torque (ST) / Locked-rotor torque (LRT):

The torque produced when power is applied to a motor at rest, i.e. when the motor is energised at full voltage and the shaft is locked in place. This is the torque used to start accelerating the load.

Pull-up torque (PUT):

This term is used for the lowest point on the torque speed curve for a motor which is accelerating a load up to full speed. Most Grundfos motors do not have a separate pull-up torque value, as the lowest point is found at the locked-rotor point. As a result, pull-up torque is the same as starting torque/locked-rotor torque for the majority of all Grundfos motors.

Breakdown torque (BT):

The maximum torque that an AC motor develops with rated voltage applied at rated frequency without causing sudden drops in speed. This is also known as **pull-out torque** or **maximum torque**.

Full-load torque (FLT):

The torque required to produce rated power at full-load speed.

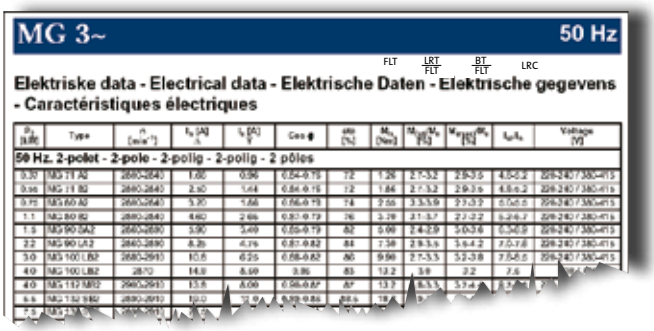

MG 3~ 50 Hz

Elektriske data - Electrical data - Elektrische Daten - Elektrische gegevens - Caractéristiques électriques

50 Hz. 2-polet - 2-pole - 2-polig - 2-polig - 2 pôles

Motor catalogues often only list the locked-rotor torque, breakdown torque, and full-load torque values

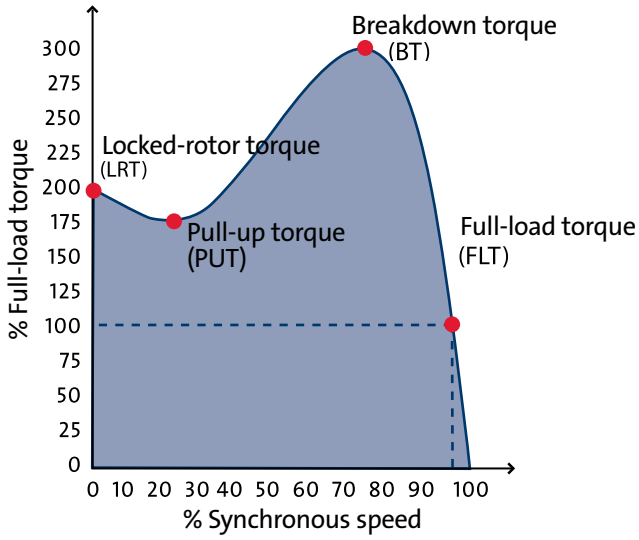

Torque/speed curve for an AC motor

Pump loads and load types

Before we move on to take a closer look at pump loads, it may be useful to briefly outline the three main load types. For our purposes, the last one is the most interesting.

Constant power

The term "constant power" is used for certain types of loads where you need less torque as the speed is increased and vice versa. Constant power loads are usually found within metal-processing applications, e.g. drilling, milling, and similar processes.

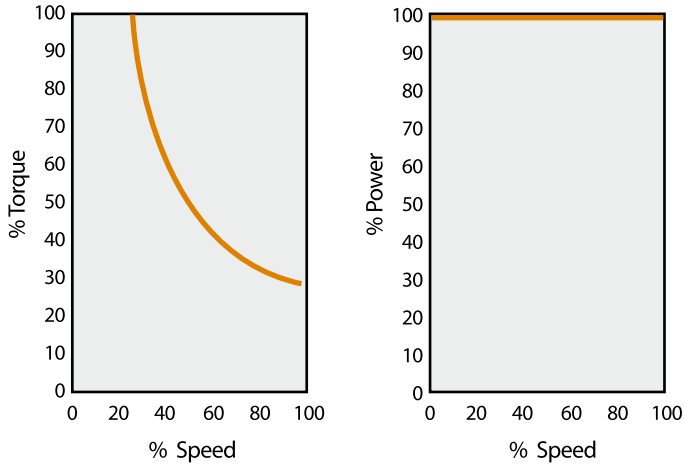

When the speed increases, the torque decreases, and the power is kept at a constant level

Constant torque

As the name suggests, "constant torque" means that the amount of torque necessary to drive a machine is constant regardless of the speed involved. One example would be conveyors.

Variable torque and power

"Variable torque" is the most relevant category for us and is found in loads where low torque is required at low speeds and greater torque is needed as the speed increases. Centrifugal pumps is a typical example.

The rest of this section will exclusively deal with variable torque and power.

Having established that centrifugal pumps feature variable torque, we should sum up some of the characteristics of the centrifugal pump. The use of variable speed drives is determined by specific physical laws. In this case, these laws are known as **affinity laws** and describe the relationship between pressure differences and flows.

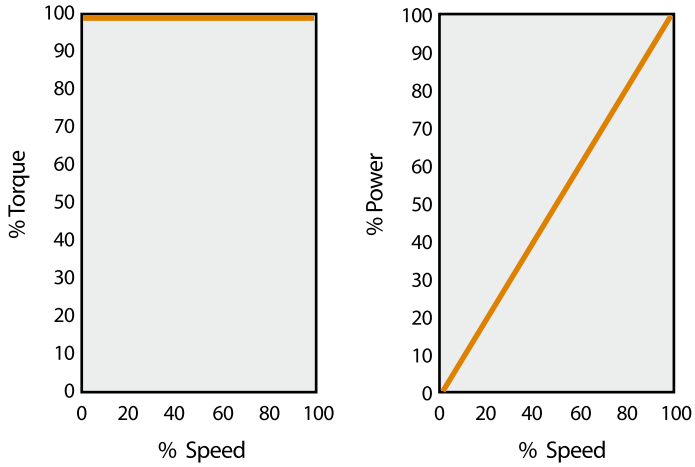

Constant torque regardless the speed

Pump loads and load types

Firstly, the rate of flow in a system is directly proportional to the speed. This is to say that if the pump runs 25% faster, the rate of flow will be 25% greater.

Secondly, the head of the pump will vary as the square of the change in speed. If the speed increases by 25%, the head increases by 56%.

Thirdly and interestingly, power is proportional to the change in speed cubed. This means that if the required speed is reduced by 50%, this equals an 87.5% decrease in power consumption.

Thus, the affinity laws explain why variable speed drives are more economical in applications which involve varying flow rates and pressures. Grundfos offers a range of motors with integrated frequency converter which regulates the speed for this very purpose.

Like the values for flow, pressure, and power, the torque required depends on the rotation.

The illustration on your right-hand side shows a cross section of a centrifugal pump. The torque requirement for this type of load is nearly opposite that of the "constant power" load. For variable torque loads, the torque required at low speed is very low, while the torque required at high speed is very high. In mathematical terms, the torque requirement is a function of the speed squared, and the power is a function of the speed cubed.

This can be illustrated in the same torque/speed curve that we used earlier to show the motor torque.

Affinity laws for centrifugal pumps

$$\frac{Q_n}{Q_x} = \frac{n_n}{n_x} \qquad \frac{H_n}{H_x} = \left(\frac{n_n}{n_x}\right)^2 \qquad \frac{P_n}{P_x} = \left(\frac{n_n}{n_x}\right)^3$$

n		Flow
↑ 25%	$\frac{RPM\ 1}{RPM\ 2} = \frac{Flow\ 1}{Flow\ 2}$	↑ 25%
n		**Pressure**
↑ 25%	$\left(\frac{RPM\ 1}{RPM\ 2}\right)^2 = \left(\frac{Pressure\ 1}{Pressure\ 2}\right)$	↑ 56%
n		**Power**
↓ 50%	$\left(\frac{RPM\ 1}{RPM\ 2}\right)^3 = \left(\frac{kW1}{kW2}\right)$	↓ 87.5%

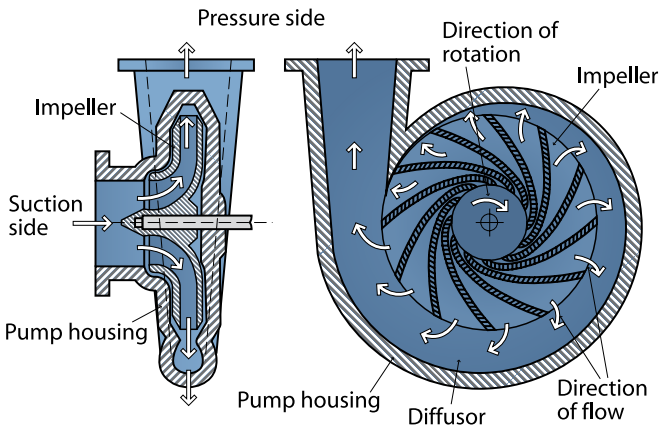

Centrifugal pump, cross section

Pump loads and load types

When a motor accelerates from zero to full speed, the torque produced can vary considerably. The amount of torque required by a given load also varies with speed. To match the motor to the relevant load, you need to ensure that the amount of torque available from the motor exceeds the torque required by the load at all times.

In the example shown on the right, a centrifugal pump has a full-load torque of 70 Nm, which corresponds to 22 kW at a nominal speed of 3000 min^{-1}. In this particular case, the pump requires 20% of the full-load torque when starting, i.e. approximately 14 Nm. After start-up, the torque drops slightly, and then increases to full-load value as the pump picks up speed.

Obviously, we want the pump to deliver the desired flow/head (Q/H) performance. This means that we must prevent the motor from stopping and ensure that it accelerates all the way up to its nominal speed without any problems. As a result, we need to ensure that the motor's torque curve matches or exceeds the load all the way from 0% to 100% speed. Any "excess" torque, i.e. the difference between the load curve and the motor curve, is used as acceleration torque.

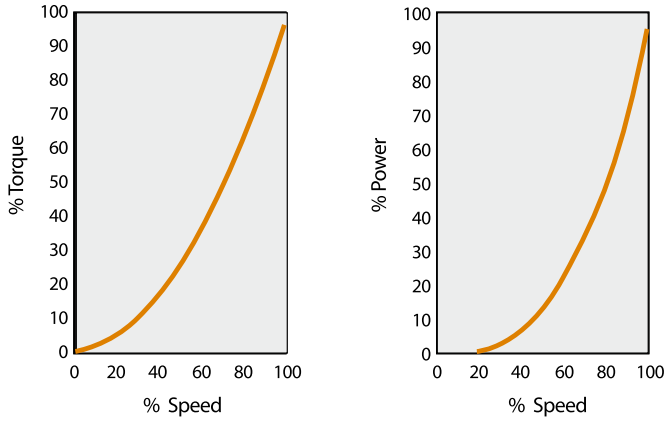

The torque requirement for centrifugal pumps is a function of the speed squared, and the power is a function of the speed cubed

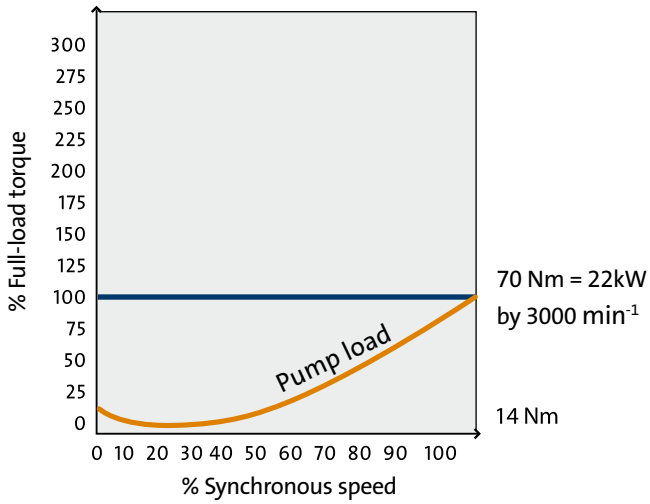

Matching motors and loads

When you need to establish whether the torque capability of a particular motor meets the requirements of a given load, you can compare the motor's speed-torque curve with the speed-torque curve of the load. The torque produced by the motor must exceed the torque requirements of the load at all times, including during acceleration and full speed.

The first curve on this page shows a typical outline for the available torque from a standard motor vs. speed. The curve also shows the typical speed torque curve for a centrifugal pump.

If we look at the second curve, we see that as the motor accelerates, it starts by drawing a line current which corresponds to 550% of the rated current. As the motor draws nearer to its rated speed, the line current diminishes. As one might expect, the motor loss is high during this initial start-up phase, so it should never be too long to avoid overheating.

It is important that we aim as accurately for the maximum speed as possible – while remaining on the right side of the maximum, of course. The reason has to do with power requirements: For example, a 1% increase in speed above the normal maximum will cause a 3% increase in the power requirement.

It is important that motor and pump are connected correctly. The number of impellers in a multistage pump like a CR or the diameter of the impeller in a singlestage pump like a NK/NB has to correspond to the number of poles and the motor's rated power.
Impeller diameter effects consumed power more or less in a similar way to speed depending on the pump type but in fourth power. A 10% reduction of impeller diameter reduces the power consumed by (1-(0.9 · 0.9 · 0.9 · 0.9)) · 100 = 34% equal to 66% of nominal power. This is only a rule of thumb, as it depend of the pumptype, the impeller design and how much you reduce the impeller.

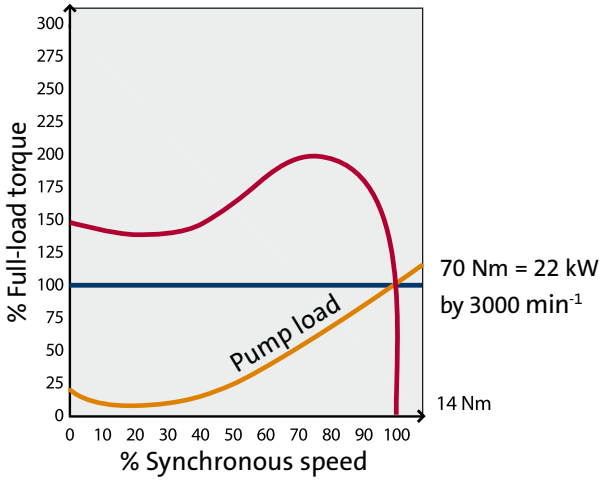

Rated motor current during acceleration

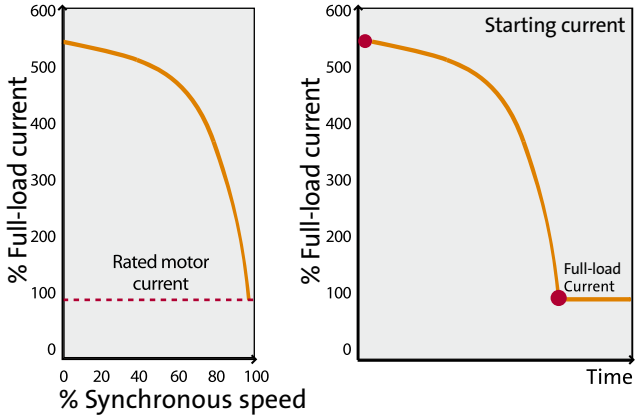

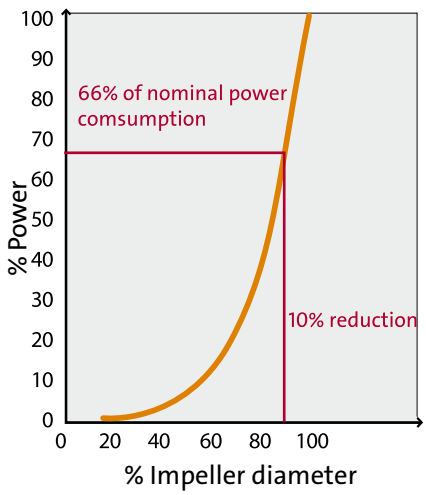

Run-up time

When we want to identify the correct motor size for pump loads, as is the case for centrifugal pumps, we should only concern ourselves with providing adequate torque and power at the nominal operation point, because the starting torque for centrifugal pumps is rather low. The run-up time, however, is short because the torque available for the acceleration is rather high.

In many cases, sophisticated motor protective systems and monitoring systems require a run-up time to be able to take the locked-rotor current into consideration. The run-up time for a motor and pump is estimated by means of the following formula:

$$t_{start} = \frac{n \cdot 2\pi \cdot I_{total}}{60 \,.\, T_{acc}}$$

t_{start} = The time it will take a pump motor to reach full-load speed

n = motor full-load speed

I_{total} = Inertia that need to be accelerated that is motor shaft, rotor, pump shaft, and impellers.

You can find the moment of inertia for pumps and motors in the data booklets.

T_{acc} = Acceleration torque

The real acceleration torque is the motor torque minus the torque of the pump at different speeds. T_{acc} can be estimated by the following formulae:

$$T_{acc} = \frac{LRT + BT - FLT}{2}$$

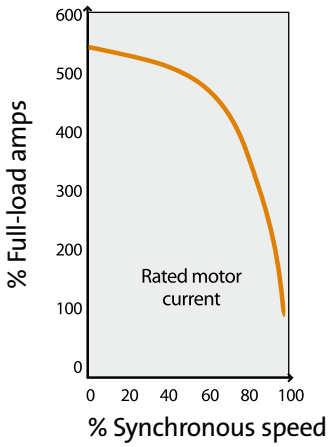

Current is 5-10 times the rated current during start-up. Therefore starting time needs focus

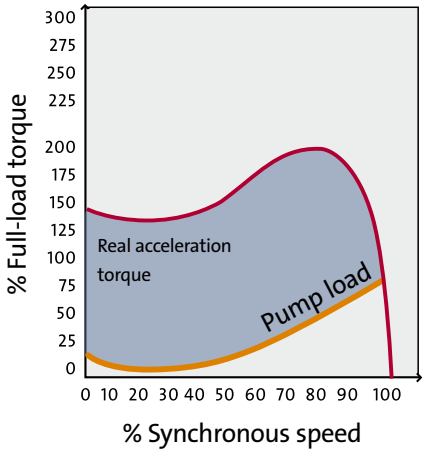

The real acceleration torque is the motor torque minus the torque of the pump at different speeds.

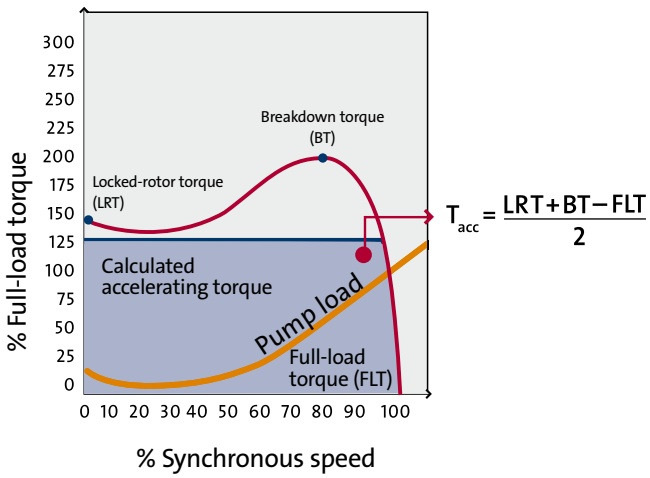

Calculated acceleration torque

Number of starts per hour

Sophisticated motor monitoring systems can monitor the number of starts per hour for a given pump and motor. The reason why it is necessary to monitor the number of starts is that every time the motor starts and accelerates, the motor consumes a high starting current. The starting current heats up the motor. If the motor does not cool down, the continuous load from the starting current will heat up the motor's stator winding considerably. Consequently, either the motor breaks down or the lifespan of the insulation system is reduced.

Normally, the motor supplier is responsible for how many starts per hour the motor can handle. Grundfos, for example, indicates the number of starts per hour in the pump data booklets, because the maximum number of starts per hour depends on the moment of inertia of the pump. As regards the motor, the number of starts per hour can be calculated. However, a motor expert can decide whether the calculated number of starts for the motor corresponds to the number of starts the pump can actually handle.

Motor data

Full-load speed (n)	=	3000	min^{-1}
Full-load torque	=	11	Nm
Locked-rotor torque (240% of full-load torque)	=	26	Nm
Breakdown (340% of full-load torque)	=	37	Nm
Inertia of motor shaft, rotor and fan (I_{motor})	=	0.0075	kgm^2

Pump data

Inertia of pump shaft and impellers (I_{pump})	=	0.0014	kgm^2

$$I_{total} = 0.0075 + 0.0014 = 0.0089\ kgm^2$$

$$T_{acc} = \frac{LRT + BT - FLT}{2}$$

$$T_{acc} = \frac{26 + 37 - 11}{2} = 26Nm$$

$$t_{start} = \frac{3000 \cdot 2\pi \cdot 0.0089}{60 \cdot 26} = 0.11\ sec$$

It is seen by this calculation for this example with a 4 kW, motor on a CR pump, that the starting time is 0.11 seconds.

Power and efficiency (eta)

There is a direct link between the power drawn from the electricity supply net, the power which the motor can supply to the pump via the shaft end, and the power delivered to the pump – which creates flow and pressure. This is often described in terms of electric power input, shaft power, and hydraulic power output.

The pump industry uses the following designations for the three different types of power associated with operating pumps.

P_1 (kW) The electric power input of pumps is, quite simply, the power which the pump motor absorbs from the electric power supply. P_1 corresponds to P_2 divided by the efficiency of the motor.

P_2 (kW) The shaft power of pumps is the power which the motor delivers to the pump shaft.

P_3 (kW) Pump input = P_2

P_4 (kW) The hydraulic power of pumps is the power which the pump delivers to the pumped liquid.

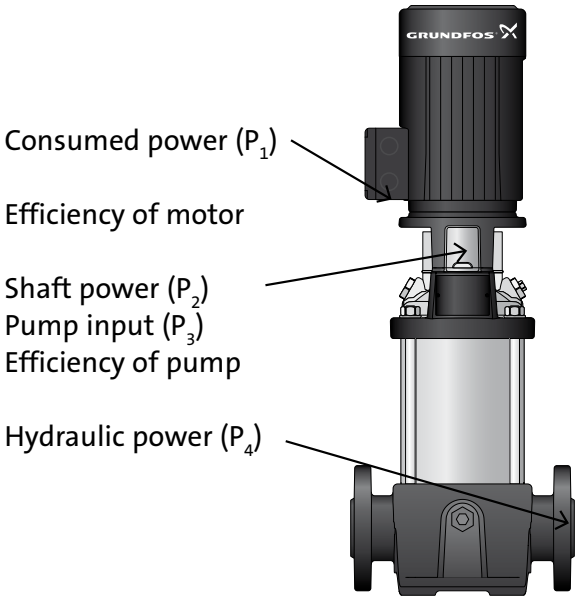

Matching made easy

Fortunately, you won't have to carry out detailed matching studies from scratch every time you need to select a pump. During the development of all pumps and motors, extensive calculations and tests are carried out in order to establish the best possible basis for pump selection. The result is Grundfos WebCAPS, a Computer Aided Product Selection application available through the Grundfos website. WebCAPS contains information about the full range of Grundfos products and includes a function which calculates the required pump and motor size.
WebCAPS also contains motor performance curves that provide characteristic data for the motor under different scenarios.

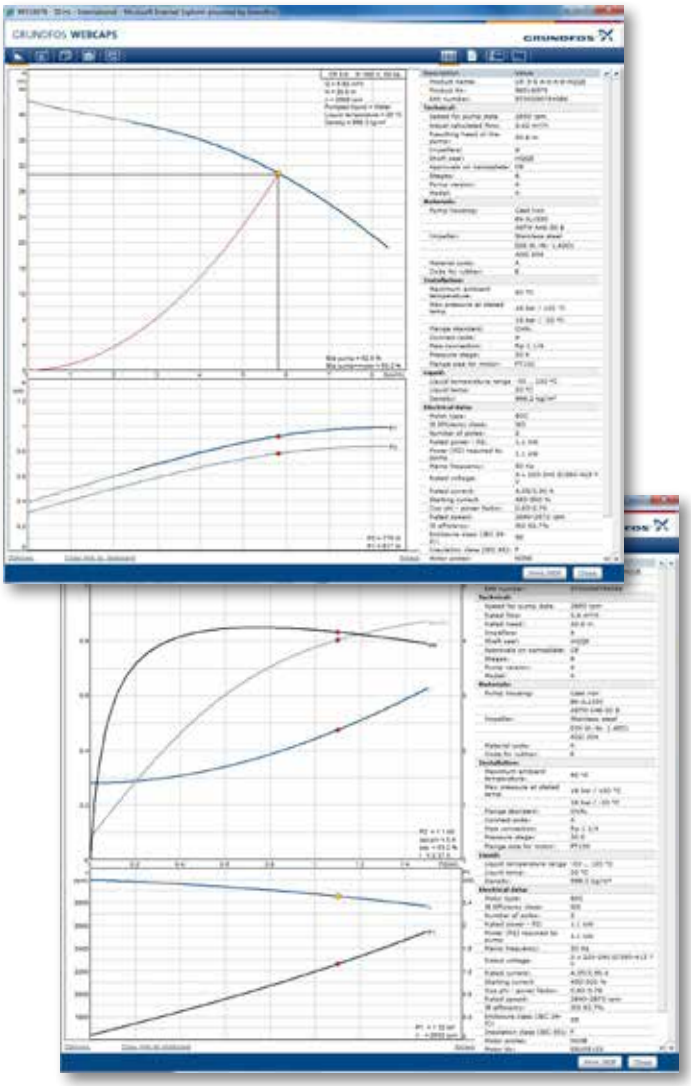

GRUND
GRUNDFOS

4. Standards for AC motors

Standards for AC motors ... 48
Overview of standards ... 48
IEC/EN ... 48
NEMA ... 48
IEC 60034 ... 50
Rotating duty cycles and ratings ... 50
Electrical tolerances ... 51
Voltage and frequency variations during operation ... 52
Overcurrents ... 52
Maximum torque ... 52
Production test ... 52
High-voltage test ... 53
Ground test ... 53
IEC 60034-2-1 Efficiency standards ... 54
Standards for the testing of motors ... 54
Direct method of analyzing motors ... 55
Indirect method for analyzing motors ... 55
Constant losses ... 55
Load-dependent losses ... 56
IEC 60034-5 Degrees of protection of electrical equipment (IP code) ... 56
IEC 60034-6 Methods of cooling of electric motors (IC code) ... 57
IEC 60034-7 Mounting arrangements and types of construction (IM code) ... 58
Foot-mounted motor ... 58
Motor with tapped-hole flange ... 58
Motor with free-hole flange ... 58
Mounting designations for Grundfos standard motors ... 59
IEC 60034-8 Direction of rotation and markings of terminals ... 59
Three-phase motors ... 59
Star(Y)-connection ... 59
Delta(Δ)-connection ... 60
IEC 60034-9 Permitted maximum noise level of electric motors ... 60
IEC 60034-11 Thermal protection ... 60
IEC 60034-14 Permitted maximum vibration limits for electric motors ... 61
IEC 60085 Electrical insulation systems - Thermal classification ... 62
IEC 60072-1 and EN 50347 Mechanical design characteristics ... 63
Designations for the non-drive end and drive end of a motor ... 64
IEC 60072-1 Designations and dimensions ... 64
EN 50347 ... 64
Relation between frame size, shaft end, motor power and flange type and size ... 65
Letter symbols and dimensional sketches ... 66
Dimensions of motor foot ... 69
Free-hole and tapped-hole flange dimensions ... 70
Shaft end dimensions ... 71
Mechanical tolerances ... 72
IEC 60072-1 Measurement of tolerances ... 74
Shaft end run-out (radial run-out) ... 74
Concentricity of spigot on shaft ... 74
Parallelism of shaft to mounting surface ... 75
Parallelism of keyway to shaft axis ... 76
Lateral displacement of keyway ... 76
CE marking ... 77
Machinery Directive 2006/42/EC ... 77
EMC-Directive 2004/108/EC ... 77
Low Voltage Directive 2006/95/EC ... 77
Approvals ... 78
Efficiency performance standards ... 78
EISA based on EPAct ... 78
MEPS: Minimum Energy Performance Standards ... 78
Mandatory Labeling ... 78
CEMEP ... 79
Ecodesign Directive 2009/125/EC and IEC 60034-30 ... 79
Motors covered by the Ecodesign Directive 2009/125/EC ... 79
Motors, not covered by the Ecodesign Directive 2009/125/EC ... 79
Ecodesign Directive 2009/125/EC requirements ... 80
Time schedule for the Ecodesign Directive 2009/125/EC ... 80
Determination of motor efficiencies ... 80
DIN 44082 Characteristics of thermistors ... 81
How does a thermistor work? ... 81
Thermal protection for a motor with PTC ... 81

Standards for AC motors

The following chapter is a study of the standards that apply for standard motors. The concept standard motors is used about motors which are designed in conformity with international or national standards within this area.

Overview of standards

In general terms the standards applying for motors can be divided into two main categories: IEC/EN and NEMA.

IEC/EN

The IEC/EN standards cover what we normally call 'IEC' motors (Europe, Asia). Metric units (SI units) such as metre (m) are applied.

The International Electrotechnical Commission (IEC) sets standards for motors used in many countries around the world. IEC 60034 standards contain recommended electrical practices that are developed by the participating IEC countries. Mechanical dimensions and tolerances of motors are specified by the IEC 60072-1 and EN50347 standards.

NEMA

The NEMA standards covers motors in the USA and Canada and other countries related to the US. Imperial (US) units such as inches are applied.
The National Electrical Manufacturers Association (NEMA) sets standards for a wide range of electrical products, including motors. NEMA is primarily associated with motors used in North America. The standards represent general industry practices and are supported by manufacturers of electrical equipment. The standard for motors is found in NEMA Standard Publication No. MG1. Some large motors may not fall under NEMA standards.

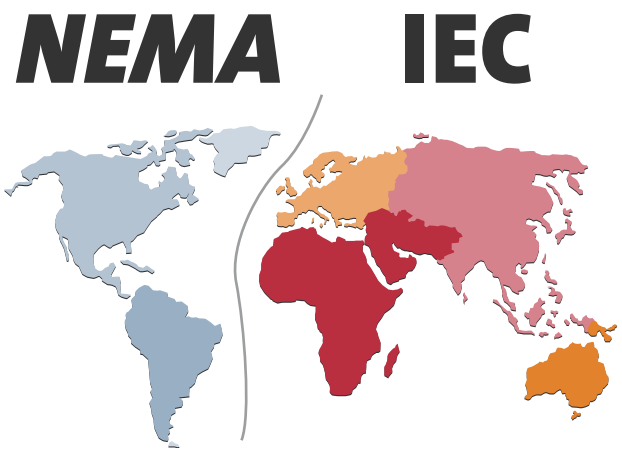

The IEC/EN standards cover what we normally call 'IEC' motors (Europe, Asia). The NEMA standards cover motors in the USA, Canada and other countries related to the US.

IEC

NEMA

Standards for AC motors

International standard IEC	Harmonised European standard EN	Description
IEC 60034-1	EN 60034-1	Rotating electric motors. Part 1: Rating and design.
IEC 60034-2-1 and IEC 60034-2A	EN 60034-2-1 and EN 60034-2A	Rotating electrical machines. Part 2-1: Standard methods for determining losses and efficiency from tests (excluding machines for traction vehicles)
IEC 60034-5	EN 60034-5	Rotating electric motors. Part 5: Enclosure class for rotating electric motors.
IEC 60034-6	EN 60034-6	Rotating electric motors. Part 6: Cooling (IC code).
IEC 60034-7 + A1	EN 60034-7 + A1	Rotating electric motors. Part 7: Classification of types of construction and mounting (IM code).
IEC 60034-8	EN 60034-8	Rotating electric motors. Part 8: Terminal marking and direction of rotation.
IEC 60034-9	EN 60034-9	Rotating electric motors. Part 9: Noise limits
IEC 60034-11	EN 60034-11	Thermal protection
IEC 60034-12	EN 60034-12	Rotating electric motors. Part 12: Start capacity of 3-phase induction motors.
IEC 60034-14	EN 60034-14	Rotating electric motors. Part 14: Mechanic vibration for machines with drive shaft heights of 56 mm or more. Measuring, estimate and vibration limits.
IEC 60038	EN 60038	IEC standard voltages.
IEC 60072-1	(EN 50347)	Dimensions and output power for rotating electric motors Part 1: Frame size 56 to 400 and flange size 55 to 1080.
IEC 60085	EN 60085	Electrical insulation systems - Thermal classification .
IEC 62262	EN 50102, EN 62262	Degrees of protection for enclosures for electrical equipment against external mechanic strokes (IK-code).
(IEC 60072-1)	EN 50347	Three-phase induction motors for standard use with standard dimensions and output power. Frame size 56 to 315 and flange size 65 to 740.
-	Other standards:	
DIN 51825		Lubricant; lubricating grease K; classification and requirements (1990-08).
DIN 44082		Thermistors; PTC sensors; thermal protection of machines; climate categorisation HFF (1985-06).
ISO 2409	EN ISO 2409	Paints and enamels. Grid cut value (adhesion).
ISO 3743-2	EN ISO 3743-2	Definition of sound power level. Minor removable sources of noise. Engineering method. Part 2: Rooms with sound control.
ISO 4871	EN ISO 4871	Declaration and verification of noise from machines and equipment.
ISO 11203	EN ISO 11203	Noise from machines and equipment. Measurement of sound pressure by the operator's ear (noise emission). Calculation on the basis of sound power level.

The table gives an overview of standards in relation to design, production and use of electric motors. Not all standards are treated in this chapter.

IEC 60034

The IEC 60034 and IEC 60072 standards are considered to be the main standards. What follows is a brief presentation of which regulations the IEC 60034 contains. Further, we will have a look at some of the most important regulations concerning motors.

Rotating duty cycles and ratings

Specifying the right size of motor for a given application can affect the operating costs considerably. In order to size the motor properly, it is necessary to examine the motor duty cycle thoroughly.
Most motors run continuously at constant load. However, in some cases the motor has to operate for shorter periods of time or intermittently. If the motor runs through a cycle that involves periods when it is not operating at maximum load, it is possible to reduce the size of the motor. To determine whether this is possible or not, it is necessary to consider the type of duty cycle involved. This requires consideration of a number of factors:

- The duration and sequence of the load applied to the motor.
- Starting, electric braking, no load, rest and standstill periods. Consequently, the type of duty of the application can affect the rating of the motor significantly.

The IEC 60034-1 standard recognises ten duty types and defines their characteristics. The ten duty types are referred to as S1 to S10.

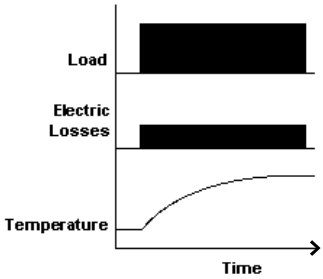

Duty type S1
continuous operation

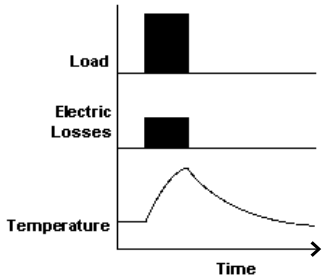

Duty type S2
short time duty

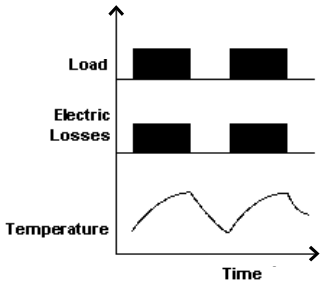

Duty type S3
intermittent periodic duty

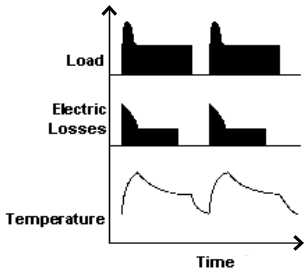

Duty type S4
intermittent periodic duty with starting

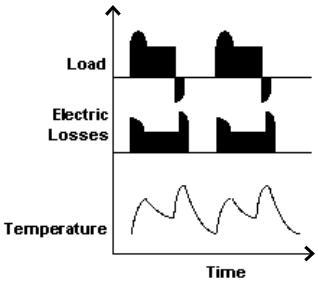

Duty type S5
intermittent periodic duty with electric braking

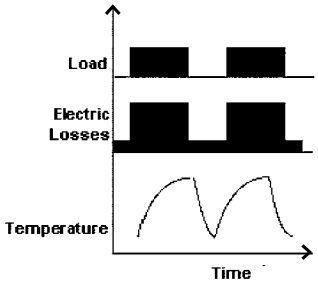

Duty type S6 - continuous operation periodic duty

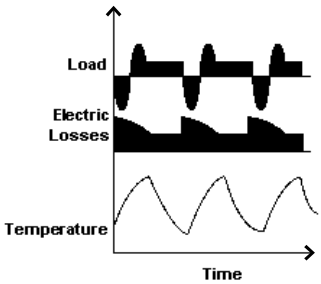

Duty type S7 - continuous operation periodic duty with electric braking

Electrical tolerances

Electrical tolerances cover allowable tolerances for efficiency, power factor, speed, locked-rotor torque, breakdown torque, locked-rotor current and moment of inertia.

Parameter	Tolerance
Efficiency	
Machines P < 50 kW	-15% (1-η_{motor})
Machines P > 50 kW	-10% (1-η_{motor})
Power factor	-1/6 (cos phi)
	(Min. 0.02; Max. 0.07)
Slip	
Machines P < 1 kW	+/- 30%
Machines P > 1 kW	+/- 20%
Locked-rotor torque	- 15%, +25% of guaranteed torque
Locked-rotor current	+20%
Pull-up torque	Not stated in connection with Grundfos motors.
	The locked-rotor torque defines the pull-up torque.
	The locked-rotor torque represents the minimum torque for single and three-phase MG and MMG motors during acceleration.
	The pull-up torque for pole-changing motors (Dahlander) is smaller than the locked-rotor torque
Breakdown torque	-10% of the guaranteed torque if the break-down torque > 1.5 full-load torque

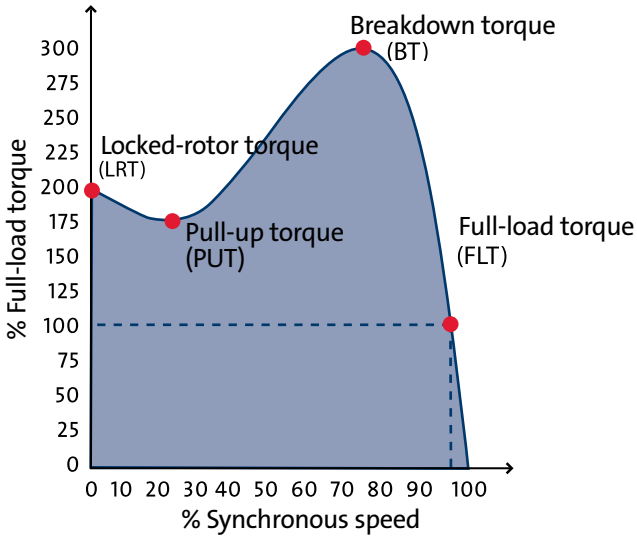

Speed/torque curve for an AC motor.
Tolerances are defined in IEC 60034-1.

Voltage and frequency variations during operation

In connection with voltages that deviate from the rated voltage, higher temperature rises are allowed. A motor shall be capable of performing its primary function in zone A, but need not comply fully with its performance at rated voltage and frequency and may exhibit some deviations. Temperature rises may be higher than at rated voltage and frequency if operating at the perimeter of zone A. When a motor is operating in zone B, it often exceed the class B temperature rise. However, Grundfos motors are able to operate on the limit of zone B without being damaged but with shorter lifetime. Extended operation at the perimeter of zone B is not recommended.

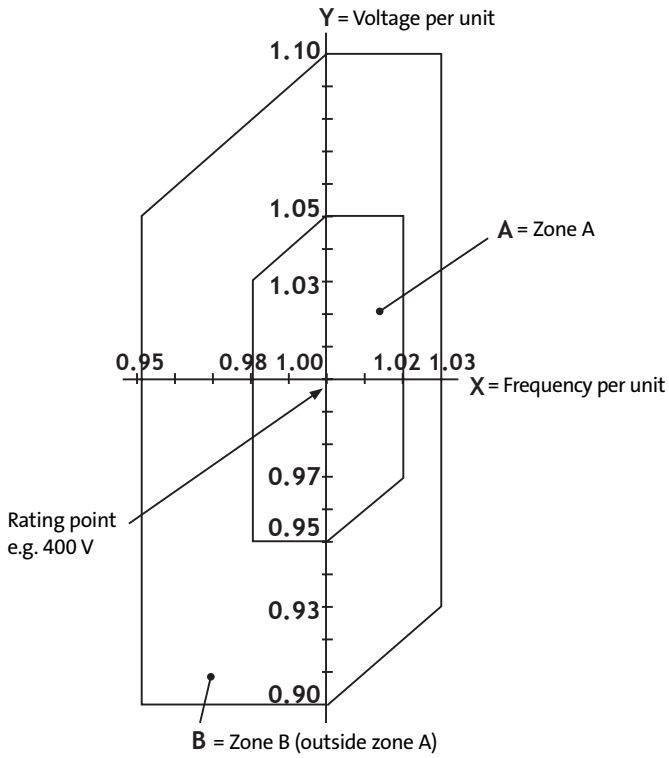

Voltage and frequency variations during operation according to the European standards IEC 60034-1 and IEC 60038.

Overcurrents

Three-phase AC-motors up to 315 kW with a rated voltage of up to 1000 V must be able to withstand overcurrents that correspond to 1.5 times the rated current for at least 2 minutes. For single-phase or three-phase motors with a rated power exceeding 315 kW, no occasional overcurrent is specified.

Maximum torque

No matter the motor construction and the duty type, they must be able to withstand a 60% higher torque than full-load torque for 15 seconds without stopping or changing the speed considerably (at gradually increasing torque). At the same time voltage and frequency remain at their rated values.

Mains voltage according to IEC 600038	
50 Hz	**60 Hz**
230 V ± 10 %	-
400 V ± 10 %	-
690 V ± 10 %	-
-	460 V ± 10 %

Production test

During production basic tests are carried out. The safety test is carried out on the basis of official requirements.

Two types of safety tests exit: High-voltage test and ground test.

Examples of rated voltage ranges for Grundfos motors	
50 Hz	**60 Hz**
220-240 V ± 5 %	220-277 V ± 5 %
380-415 V ± 5 %	380-440 V ± 5 %
380-415 V ± 5 %	380-480 V ± 5 %
660-690 V ± 5 %	660-690 V ± 5 %

High-voltage test

The aim of the high-voltage test is to test the adequacy of the insulation. The test is carried out by supplying a high voltage (alternating voltage 50 Hz or 60 Hz) between all phases and the frame and the leakage current is then measured.

According to the standard the test voltage for motors with P2 < 10000 kW must be:

$$1000\ V + 2 \cdot U$$

(U is the maximum rated motor voltage)
minimum 1500 V for 1 minute.

In mass production of motors up to 5 kW, the 1 minute test may be replaced by a 1-second test, where the test voltage is increased further 20%.

Ground test

The aim of the ground test is to test the ground terminal connection to frame. The resistance should not exceed 0.1 Ω.

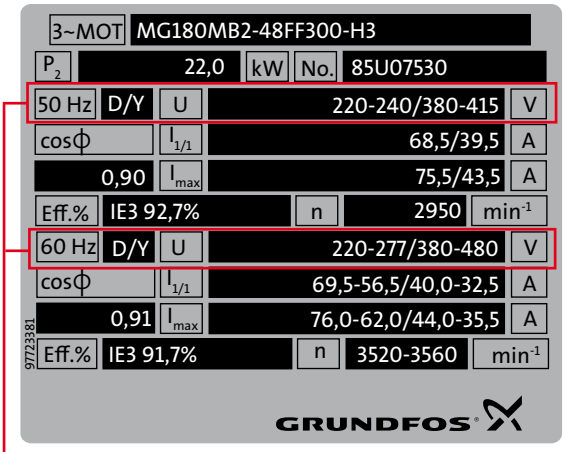

Rated motor voltage

IEC 60034-2-1 Efficiency standards

Several standards for testing electric machinery exist on a worldwide basis. For induction motors, the three most important ones are IEEE Standard 112, JEC 37 (Japan) and IEC 60034-2-1. The efficiency value obtained from the different testing standards can differ by several percent. This seems in contradiction with the theoretical definition of the efficiency:

$$\eta = \frac{\text{power out}}{\text{power in}} = 1 - \frac{\text{overall losses}}{\text{power in}}$$

The losses in an induction motor are distributed as follows:

1. Stator winding loss P_{cu1} - approximately 40-45%
2. Rotor winding loss - P_{cu2} - approximately 15%
3. Friction loss P_{fric} - approximately 10-15%
4. Iron loss P_{fe} - approximately 20%
5. Stray loss P_{stray} - approximately 10%

The main difference between the standards is the way in which the fifth loss component stray loss (P_{stray}), the additional load losses, is treated.

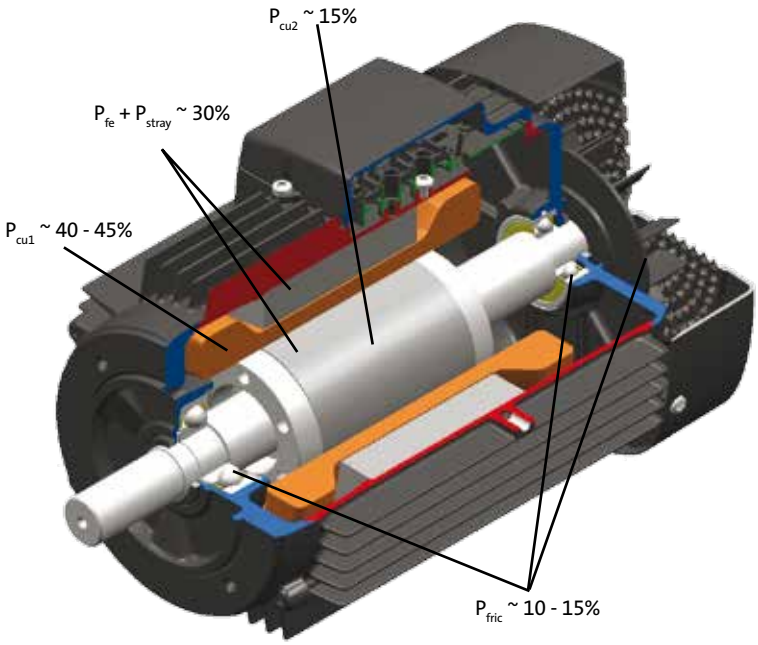

Loss distribution in an induction motor

Standards for the testing of motors

The testing of standard motors is described in IEC 60034-2-1. In the following paragraphs two different methods of testing motors are presented: The direct method and the indirect one.

The difference between these two methods is the way in which the motor efficiency is established. IEC 60034 covers the so-called industrial motors. Requirements of domestic appliances are listed in IEC 60335, which specifies somewhat different (stricter) requirements of the motors. In addition to the tests of standard motors our laboratory also undertakes to test products integrating motor and pump. In principle the thermal tests are the same, but the tests are carried out according to other standards. Small circulator pumps are for instance tested according to IEC 60335-2-51.

Direct method of analyzing motors

The most common method used for testing small-scale motors (< 45 kW) is the direct method where measurements are taken both at the power input (P_1) and at the power output (P_2). The power output is measured by means of a torque transducer placed between the motor and the load. The torque transducer measures the torque output (M) of the motor and the speed (n).

The power output is then calculated on the basis of the following equation:

$$P_2 = M \cdot \omega = M \cdot \frac{2 \cdot \pi \cdot n}{60}$$

The efficiency of the motor can then be calculated using this equation:

$$\eta = \frac{P_2}{P_1} \ (\%)$$

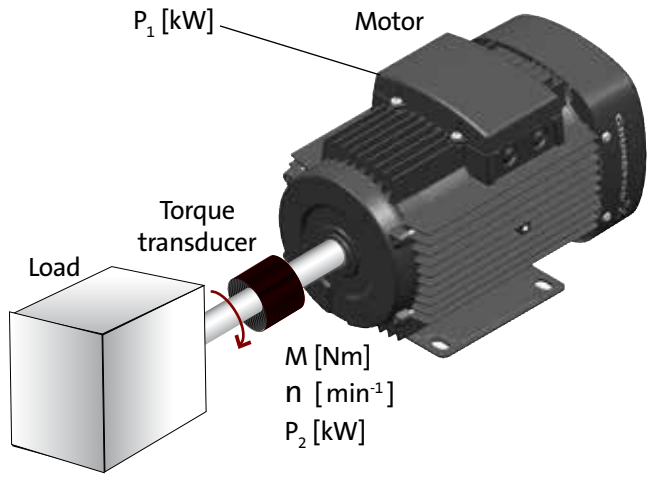

Measurement arrangement where the direct method is used

Indirect method for analyzing motors

The indirect method can only be used for three-phase motors. For this method no torque transducer is used. This means that the power output of the motor has to be calculated to determine the efficiency.

In order to be able to define the power output it is necessary to know the losses in the motor, as the total sum of the losses and the power output equal the power input.

We distinguish between two types of losses in the motor: Constant losses and load-dependent losses.

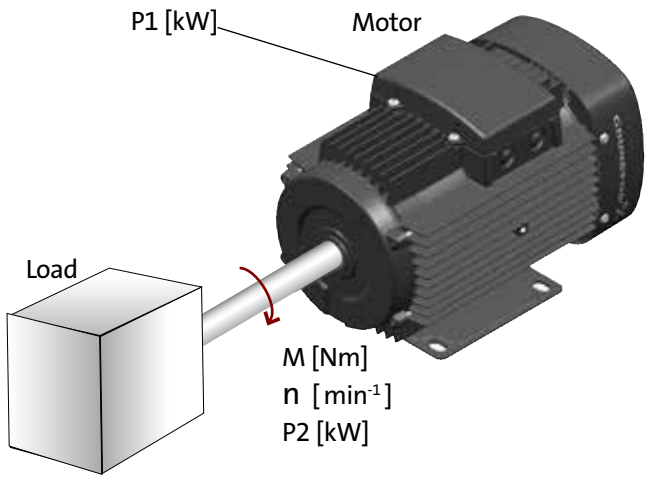

Measurement arrangement where the indirect method is used

Constant losses

Constant losses include iron loss (P_{fe}) and friction loss (P_{fric}). These kinds of losses are determined by no-load analysis of the motor. Constant losses are determined on the basis of a no-load test of the motor.

Load-dependent losses

Load-dependent losses are stator ohmic loss (P_{cu1}), rotor ohmic loss (P_{cu2}) and stray loss (P_{stray}). Load-dependent losses are calculated by using various loads.

The motor efficiency is calculated on the basis of this equation:

$$\eta = \frac{P_2}{P_1} = \frac{P_1 - \sum \text{loss}}{P_1} = \frac{P_1 - P_{cu1} - P_{cu2} - P_{stray} - P_{fe} - P_{fric}}{P_1} [\%]$$

Efficiencies of Grundfos motors are measured and determined according to the indirect measurement method described in IEC 60034-2-1.

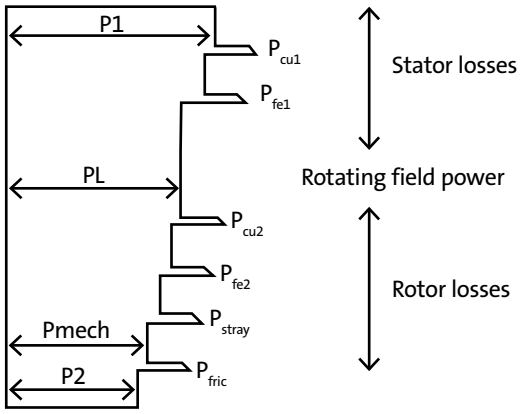

Diagram showing the losses in the motor

IEC 60034-5 Degrees of protection of electrical equipment (IP code)

The motor enclosure class complies with IEC 60034-5. The enclosure class states the degree of protection of the motor against ingress of solid objects and water. The enclosure class is stated by the two letters IP followed by two digits.

IP 44 protected motors are of the exact same quality as IP 55 protected motors. The difference between the two types of protection is that IP 44 protected motors have drain holes that enable escape of water, which has entered the stator housing. Therefore, an IP 44 protected motor is more suitable for installation in a damp environment than an IP 55 protected motor is.

First digit	Second digit
Protection against contact and ingress of solid objects	**Protection against ingress of water**
0 No special protection	**0** No special protection
1 The motor is protected against solid objects bigger than 55 mm, e.g. a hand	**1** The motor is protected against vertically falling drops of water, such as condensed water
2. The motor is protected against objects bigger than 12 mm, e.g. a finger	**2** The motor is protected against vertically falling drops of water, even if the motor is tilted at an angle of 15°
3 The motor is protected against solid objects bigger than 2.5 mm, i.e. wires, tools, etc.	**3** The motor is protected against water spray falling at an angle of 60° from vertical
4 The motor is protected against solid objects bigger than 1 mm, e.g. wires	**4** The motor is protected against water splashing from any direction
5 The motor is protected against the ingress of dust	**5** The motor is protected against water being projected from a nozzle from any direction
6 The motor is completely dust-proof	**6** The motor is protected against heavy seas or high-pressure water jets from any direction
	7 The motor is protected when submerged from 15 cm to 1 min water for a period specified by the manufacturer
	8 The motor is protected against continuous submersion in water under conditions specified by the manufacturer

The enclosure class is stated by means of two letters IP followed by two digits; for example IP55

IEC 60034-6 Methods of cooling of electric motors (IC code)

The three most frequently used motor cooling methods have the following designations - IC codes according to the IEC 60034-6 standard IC 411, IC 410, and IC 418 are applied.

IC 410 : The motor is cooled by free convection

IC 411 : The motor is cooled by a fan mounted on the motor shaft.

IC 418: The motor is cooled by an air flow typically coming from an external fan.

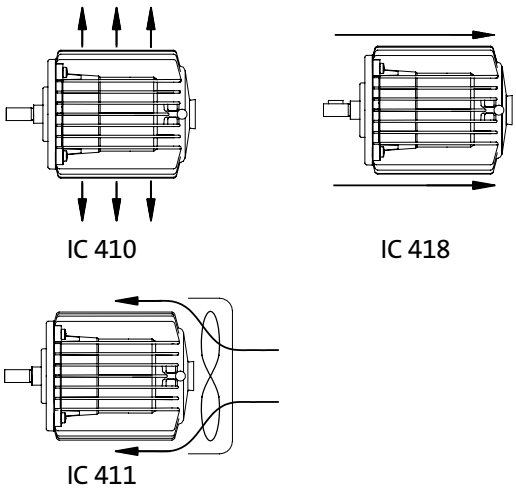

The illustrations show what kind of cooling Grundfos applies in motors

IEC 60034-7 Mounting arrangements and types of construction (IM code)

Basically, three types of standard motors exist: Foot-mounted motor, flange-mounted motor with tapped-hole flange and flange-mounted motor with free-hole flange. The motor types differ from one another in the way they are mounted in different applications.

Foot-mounted motor

This kind of motor is mounted in the application by a foot with holes. The foot can either be integrated, (normal for cast iron motors) or it can be retrofitted, (normal for motors with stator housing made of aluminium).

Motor with tapped-hole flange

This type of motor is mounted in the application by means of bolts, which are screwed into the drive-end flange. In the drive-end flange there are threaded holes with standardised thread size and placed in a standardised pitch circle diameter.

Motor with free-hole flange

This type of motor is mounted in the application by means of bolts through free-holes in the drive- end flange. The diameter of these free-holes is standardised and the holes are placed in a standardised pitch circle diameter.

Combination of flange and foot

The above-mentioned motor types can be combined in different ways:

- Horizontally or vertically
- With the shaft end pointed in different directions
- With the foot turned in different directions

The combinations are described in mounting designations and are defined with codes according to IEC 60034-7.

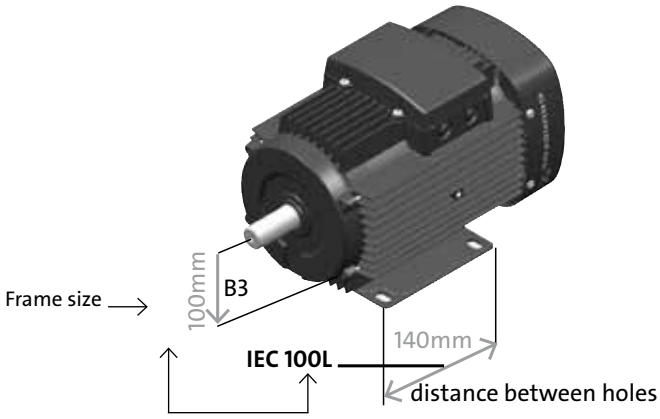

Foot-mounted motor - B3

Motor with tapped-hole flange - B14/V18

Motor with free-hole flange - B5/V1

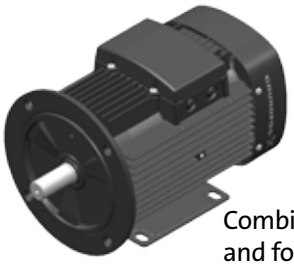

Combination of flange and foot - B35

Mounting designations for Grundfos standard motors

Grundfos standard motors are completely closed squirrel-cage induction motors with dimensions that comply with IEC 60072-1. Grundfos uses the mounting designations which are shown in the illustration on your right hand side. Motors are stated according to the following two different codes in IEC 60034-7:

- The IEC 60034-7 code I, that is the designation IM (International Mounting) followed by the previous DIN 42590 code
- IEC 60034-7 code II.

Grundfos uses code 1 in documentation of AC motors, which also is common pratice outside Grundfos.

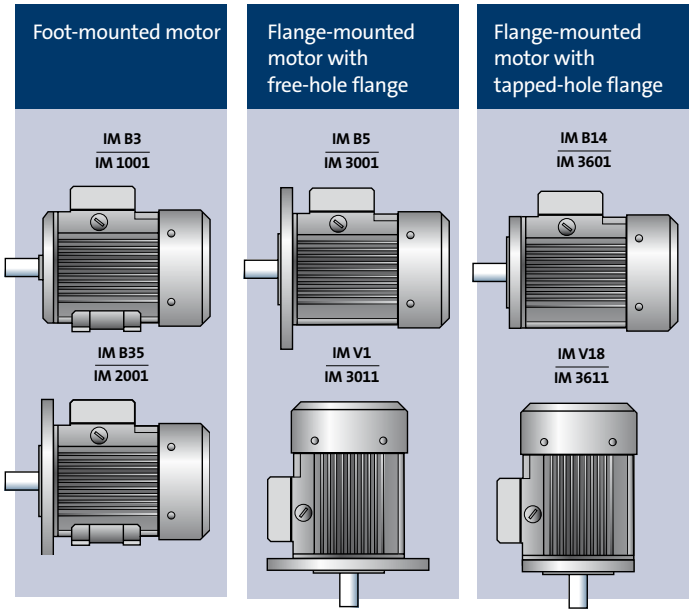

Different mounting methods

IEC 60034-8 Direction of rotation and markings of terminals

Three-phase motors

The windings are connected in star(Y)-connection or in delta(Δ)-connection according to IEC 60034-8. This is done by wiring the terminal board as shown in the wiring diagram to the right. The marking of the terminal board is also defined in IEC 60034-8.

Star(Y)-connection

By short-circuiting the terminals W2, U2 and V2 and connecting the mains to the W1, U1 and V1 you get a star(Y)-connection.

Current: $I_{phase} = I_{mains}$

Voltage: $U_{phase} = U_{mains} / \sqrt{}$

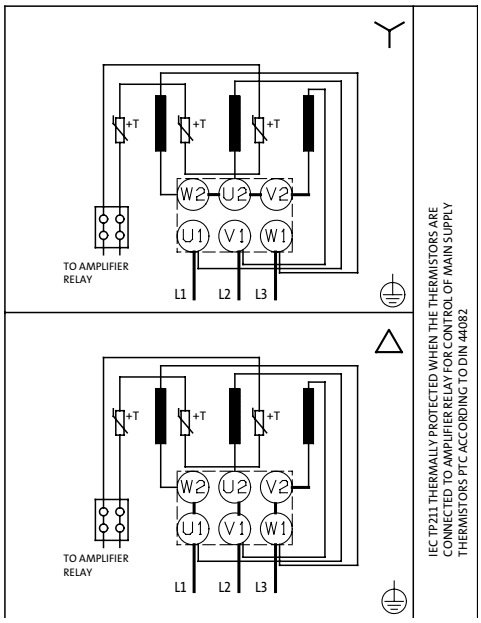

Typical wiring diagram

IEC 60034-9 Permitted maximum noise level of electric motors

Delta(Δ)-connection

When connecting the end of a phase to the start of another phase you get a delta(Δ)-connection

Current: $I_{phase} = I_{mains} / \sqrt{\ }$

Voltage: $U_{phase} = U_{mains}$

The direction of rotation for the motor shaft is defined in IEC 60034-8 as either CW (clockwise) or CCW (counter-clockwise), when looking into the shaft.

The direction of rotation can also be changed at the terminal board. When dealing with a three-phase motor, this is done by interchanging two of the line cables, eg.: switch L1 and L2. When dealing with a single-phase motor always check the wiring diagram.

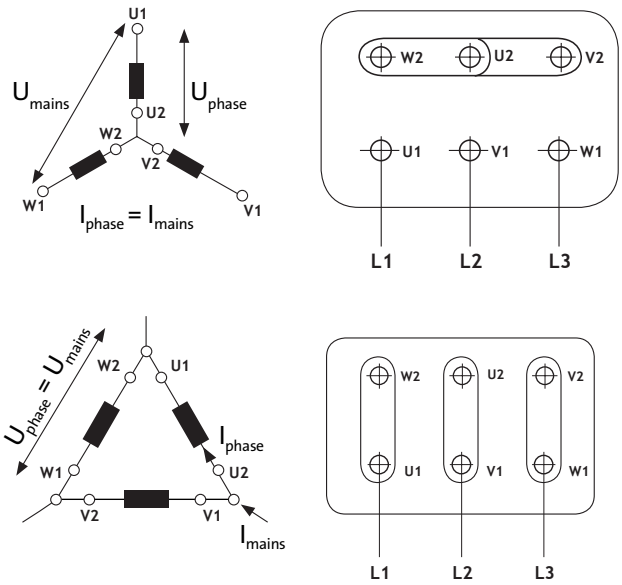

IEC 60034-9 Permitted maximum noise level of electric motors

The permitted noise levels of electric motors are stated in IEC 60034-9. The noise level of Grundfos motors is well below the limit values in the standard.

IEC 60034-11 Thermal protection

Specifies requirements relating to the use of thermal protectors and thermal detectors incorporated into the stator windings or placed in other suitable positions in induction machines in order to protect them against serious damage due to thermal overloads.
IEC 60034-11 specifies protection against thermal overload with slow variation or with rapid variation. Grundfos motors can be delivered with both types of protection.

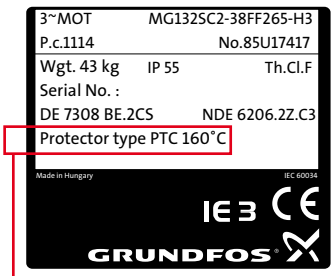

Thermal protector type PTC 160°C

IEC 60034-14 Permitted maximum vibration limits for electric motors

The permitted vibration limits for electric motors are stated in IEC 60034-14. All Grundfos standard motors comply with these standards and are vibration grade A motors.
The table below shows the maximum vibration limits as to displacement, speed and acceleration (rms) for different frame sizes, i.e. H (the distance from the foot to the centre line of the shaft).

The vibration level is normally indicated as speed. All rotors are balanced dynamically with half a key in the keyway.

Frame size [mm]										
Vibration grade	Shaft height, mm	56 ≤ H ≤ 132			132 < H ≤ 280			H > 280		
	Mounting	Displacement [µm]	Speed [mm/s]	Acceleration [m/s²]	Displacement [µm]	Speed [mm/s]	Acceleration [m/s²]	Displacement [µm]	Speed [mm/s]	Acceleration [m/s²]
A	Suspended	25	1.6	2.5	35	2.2	3.5	45	2.8	4.4
	Rigid mounting	21	1.3	2.0	29	1.8	2.8	37	2.3	3.6
B	Suspended	11	0.7	1.1	18	1.1	1.7	29	1.8	2.8
	Rigid mounting	-	-	-	14	0.9	1.4	24	1.5	2.4

IEC 60085 Electrical insulation systems - Thermal classification

Insulation classes (temperature classes) and temperature rise (ΔT) are defined in IEC 60085. As a standard, Grundfos IE1 motors are made to operate in ambient temperatures up to 40˚C, and Grundfos IE3 and IE2 motors are normally made to operate in ambient temperatures up to 60˚C. The maximum acceptable temperature rise at rated load and voltage is according to class B. This implies that the motors are considered to be cold because their maximum temperature rise is 80K.

The limit temperatures only apply for operation at the installation and for nameplate data for continuous operation. During operation in different operating conditions and with different supply voltages, limits for temperature increase or temperature limits at rated duty point can be exceeded.

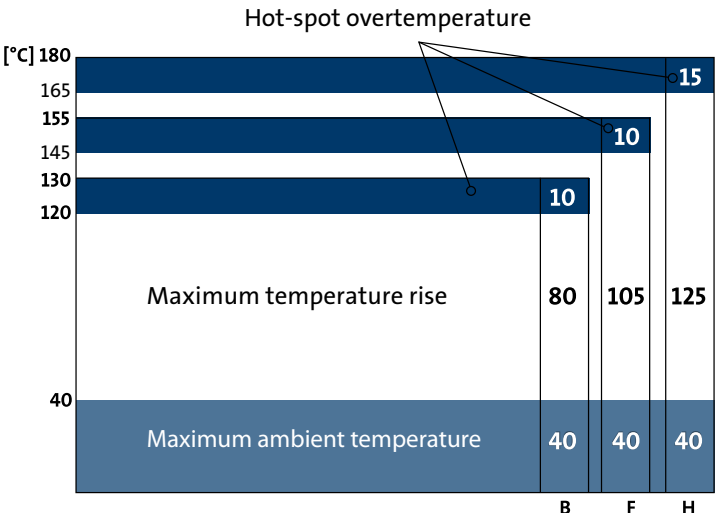

Class	Maximum ambient temperature (°C)	Maximum temperature rise (K)	Hot-spot overtemperature (K)	Maximum winding temperature (Tmax) (°C)
B	40	80	10	130
F	40	105	10	155
H	40	125	15	180

Different insulation classes and their temperature rise at rated voltage and load

IEC 60072-1 and EN 50347 Mechanical design characteristics

The mechanical design of a motor is characterised by a number of parameters. The most important one is frame size, which is supplemented by information regarding the connection.

The frame size is stated for both IEC and NEMA versions using height from bottom of foot to centre of shaft end (for motors without foot, the height is used, which would have existed if the motor was provided with a foot).Therefore the frame size is based on the foot-mounted B3 motor type. When dealing with other IM codes such as B5, the frame size indicates the size of motor if feet were equipped. The letter code which is indicated after the frame size (S (small), M (medium) or L (large)) indicates the distance between the holes in the foot.

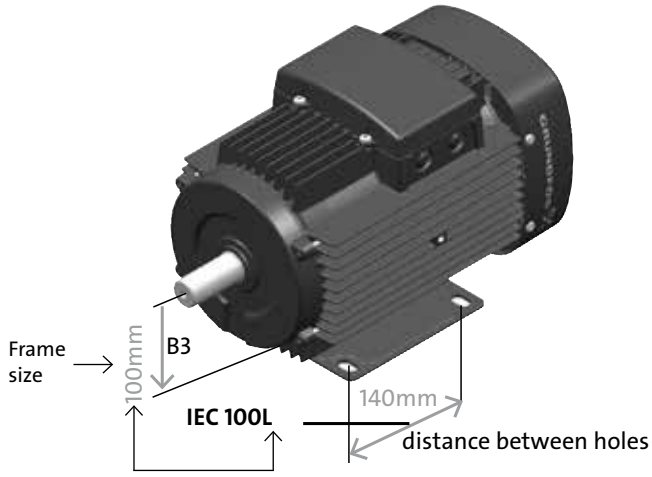

	IEC	NEMA
Frame size	Height in mm Followed by a letter which refers to the distance between the holes in the foot lengthways in relation to the motor. S = small M = medium L = large	For small motors (up to approx. 1 hp) height in inches x 16 For medium-sized motors (from approx. 1 hp) height in inches x 4 Followed by one or two numbers based upon a key that designates the distance between the holes in the foot lengthways in relation to the motor.
Flange and other information	Shaft-end diameter in mm FT = Flange with tapped holes FF = Flange with free holes Followed by pitch circle diameter in mm	A = Industrial DC machine C = »C-face« threaded flange T = Standardised version (many other letter markings are to be found in NEMA)
Example 1	**IEC: 112 M 28**	**NEMA: 143T**
Explanation of example 1	Foot-mounted motor with centre-line height 112 mm. Foot in »medium« version 28 mm shaft end	Foot-mounted motor with centre-line height 3.5” (14/4 = 3.5). Foot in »3« version.
Example 2	**IEC: 112 - 28 FF 215**	**NEMA: 143TC**
Explanation of example 2	Frame size 112, 28 mm shaft end. Flange with free holes and pitch circle = 215 mm.	Frame size 143. Threaded flange »C-face«.

Main principles of the IEC and NEMA motor designations

IEC 60072-1 and EN 50347
Mechanical design characteristics

The ends of motors are distinguished from each other by using the following designations:

D or DE, which stands for the 'Drive End'
N or NDE, which stands for the fan end, i.e. the 'Non- Drive End'

In some cases, the following German designations are used:

A or AS for the drive end: »Antriebsseite«
B or BS for the non-drive end (where the fan is mounted): »Belüftungsseite«.

The dimensions and tolerances of a motor are usually found in the suppliers' catalogues or product data sheets or in the IEC 60072-1 and EN 50347 standards.

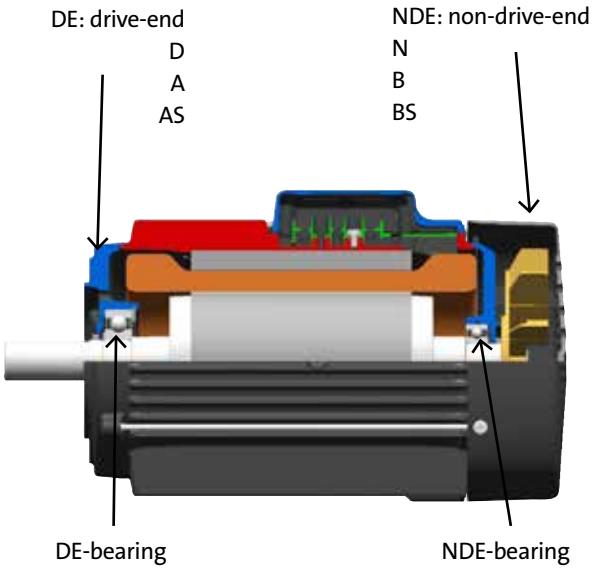

Designations for the non-drive end and drive end of a motor

Please note that IEC and NEMA have not established any requirements as to power input or output of the individual frame sizes. However, there is widespread practice in the market to define the relation, which appears from various suppliers' catalogues.

IEC 60072-1 Designations and dimensions

This standard specifies the standardised external dimensions and tolerance for frame size 56 to 400 and does not refer output power ratings to frame sizes.

EN 50347

This standard specifies the standardised external dimensions and tolerances equal to IEC 60072-1. Likewise, it specifies the relation between power output and frame size from 56 to 315M and flange size 65 up to 740.

IEC 60072-1 and EN 50347
Mechanical design characteristics

Relation between frame size, shaft end, motor power and flange type and size

The figure gives an overview of the relation between frame size, shaft end, motor power and flange type and size. For motors with frame sizes 56 and up to and including 315M, the relationship is specified in EN 50347. No standard covers this relation for motors from frame size 315L and upward. However, different motor manufacturers use the relation between the factors shown in the table below.

Flanges and shaft end comply with the EN 50347 standard. Some pumps have a coupling, which requires a smooth motor shaft end or a special shaft extension, which is not defined in the standards.

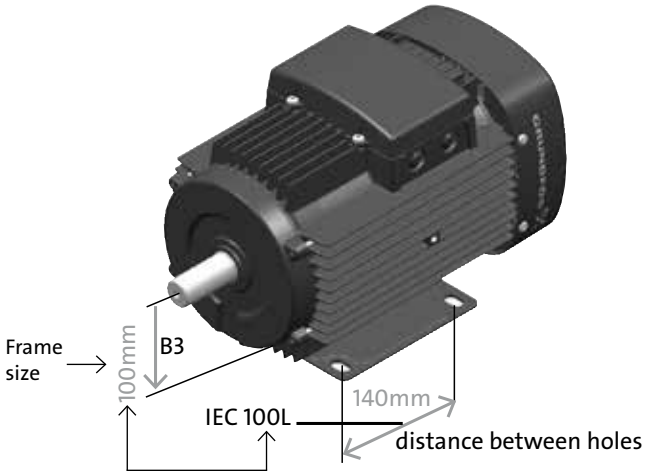

1	2		3				4	
Frame size	Shaft end diameter		Rated power				Flange size	
	2-pole	4-, 6-, 8-pole	2-pole	4-pole	6-pole	8-pole	Free-hole flange	Tapped-hole flange
	[mm]	[mm]	[kW]	[kW]	[kW]	[kW]	(FF)	(FT)
56	9	9	0.09; 0.12	0.06;0.09	-	-	FF100	FT65
63	11	11	0.18; 0.25	0.12 ; 0.18	-	-	FF115	FT75
71	14	14	0.37; 0.55	0.25; 0.37	-	-	FF130	FT85
80	19	19	0.75; 1.1	0.55; 0.75	0.37; 0.55	-	FF165	FT100
90S	24	24	1.5	1.1	0.75	0.37	FF165	FT115
90L	24	24	2.2	1.5	1.1	0.55	FF165	FT115
100L	28	28	3	2.2; 3	1.5	0.75; 1.1	FF215	FT130
112M	28	28	4	4	2.2	1.5	FF215	FT130
132S	38	38	5.5; 7.5	5.5	3	2.2	FF265	FT165
132M	-	38	-	7.5	4; 5.5	3	FF265	FT165
160M	42	42	11; 15	11	7.5	4; 5.5	FF300	FT215
160L	42	42	18.5	15	11	7.5	FF300	FT215
180M	48	48	22	18.5	-	-	FF300	-
180L	-	48	-	22	15	11	FF300	-
200L	55	55	30; 37	30	18.5; 22	15	FF350	-
225S	-	60	-	37	30	18.5	FF400	-
225M	55	60	45	45	-	22	FF400	-
250M	60	65	55	55	37	30	FF500	-
280S	65	75	75	75	45	37	FF500	-
280M	65	75	90	90	55	45	FF500	-
315S	65	80	110	110	75	55	FF600	-
315M	65	80	132	132	90	75	FF600	-
315L	65	80	160; 200; 250	-	-	-	FF600	-
355	75	100	315; 355; 400; 450; 500	315; 355; 400; 450; 500	-	-	FF740	-
400	80	100	560; 630; 710	560; 630; 710	-	-	FF840	-
450	90	120	800; 900; 1000	800; 900; 1000	-	-	FF940	-

IEC 60072-1 and EN 50347
Mechanical design characteristics

Letter symbols and dimensional sketches

The EN 50347 standard specifies the following as to designation and dimension of motor sketches. The symbols identify the dimensional features of a motor.
Mandatory dimensions are marked with (*).

IEC-norm	DIN-norm	Description
*A	b	distance between centre-lines of fixing holes (end view)
AA	n	width of the end of the foot (end view)
AB	f	overall dimension across the feet (end view)
AC	g	diameter of the motor
AD	p1	distance from the centre-line of the machine to extreme outside of the terminal box or other most salient part mounted on the side of the motor
*B	a	distance between the centre-lines of the fixing holes (side view)
BA	m	length of the foot (side view)
BB	e	overall dimension across the feet (side view)
*C	w1	distance from the shoulder on the shaft at DE to the centre-line of the mounting holes in the nearest feet
CA		distance from the shoulder on the shaft at NDE to the centre-line of the mounting holes in the nearest feet
*CB		rounding fillet at the shoulder on the shaft at DE
CC		rounding fillet at the shoulder on the shaft at NDE
*D	d	diameter of the shaft at DE
DA		diameter of the shaft at NDE
DB	d6	thread-size in the centre hole at DE
DC		thread-size in the centre hole at NDE
*E	l	length of the shaft from the shoulder at DE
EA		length of the shaft from the shoulder at NDE
*EB		length of the key at DE
EC		length of the key at NDE
*ED		distance from the shoulder on the shaft at DE to the nearest end of the keyway
EE		distance from the shoulder on the shaft at NDE to the nearest end of the keyway
*F	u	width of the keyway or key of the shaft at DE
FA		width of the keyway or key of the shaft at NDE
*FB		rounding fillet in the bottom of the keyway at DE
FC		rounding fillet in the bottom of the keyway at NDE
G		distance from the bottom of the keyway to the opposite surface of the shaft at DE
*GA	t	distance from the top of the key to the opposite surface of the shaft at DE
GB		distance from the bottom of the keyway to the opposite surface of the shaft at NDE

NOTE 1
The symbols mentioned in above table include all letter symbols listed in IEC 60072-1 supplemented with additional letters necessary for the EN standard.
R: This dimension is normally 0, why it is often left out of documentation and drawings.

IEC-norm	DIN-norm	Description
GC		distance from the top of the key to the opposite surface of the shaft at NDE
*GD		thickness of the key of the shaft at DE
*GE		depth of the keyway at the crown of the shaft extension at DE
GF		thickness of the key of the shaft at NDE
GH		depth of the keyway at the crown of the shaft extension at NDE
*H	h	distance from the centre-line of the shaft to the bottom of the feet (basic dimension)
H'		distance from the centre-line of the shaft to the mounting surface - e.g. the bottom of the feet in the feet-up version
HA	c	thickness of the feet
HC		distance from the top of the horizontal motor to the bottom of the feet
HD	p	distance from the top of the lifting eye, the terminal box or other most salient part mounted on the top of the motor to the bottom of the feet
HE		distance from the mounting surface to the lowest part of the motor in the feet-up version
*K	s	diameter of the holes or width of the slots in the feet of the motor
L	k	overall length of the motor with a single shaft
LA	c1	thickness of the flange
LB		distance from the mounting surface of the flange to the end of the motor
LC		overall length of the machine when there is a shaft at NDE
*M	e1	pitch circle diameter of the fixing holes
*N	b1	diameter of the spigot
*P	a1	outside diameter of the flange, or in the case of a non-circular outline twice the maximum radial dimension
*R		distance from the mounting surface of the flange to the shoulder on the shaft
*S	s1	diameter of the fixing holes in the mounting flange or nominal diameter of thread
*T	f1	depth of the spigot

IEC 60072-1 and EN 50347
Mechanical design characteristics

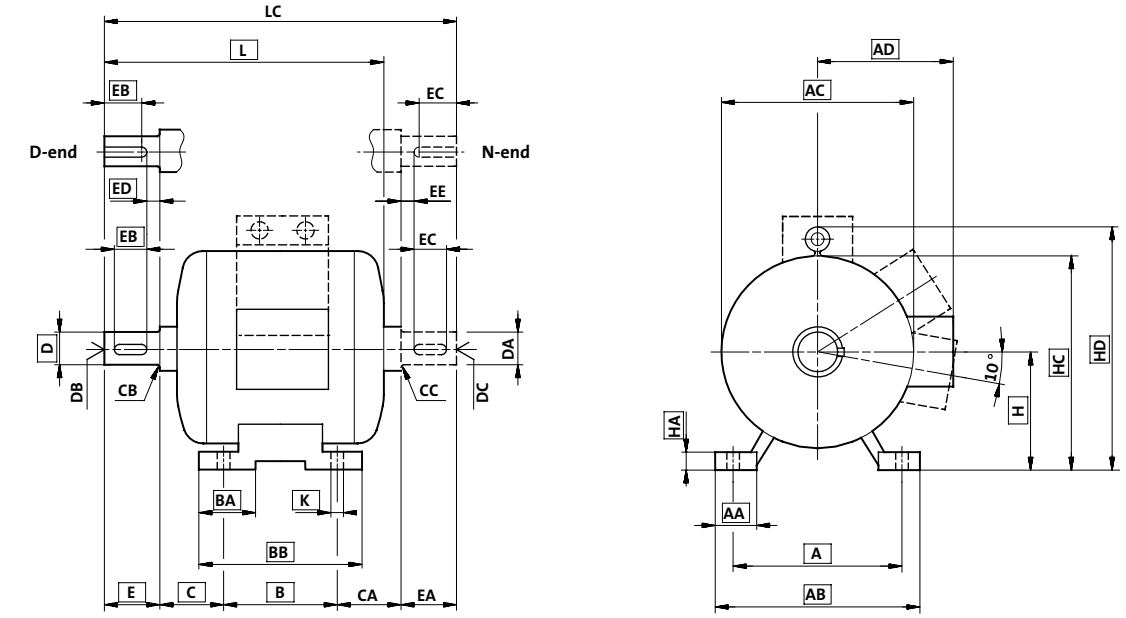

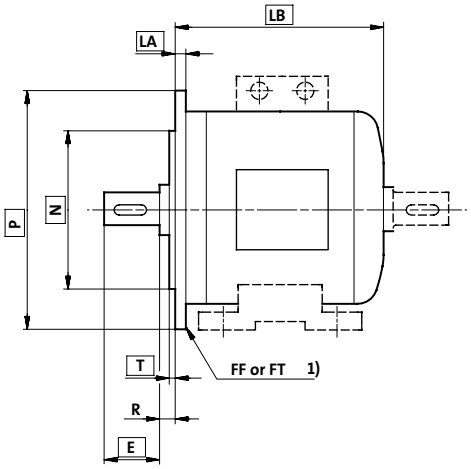

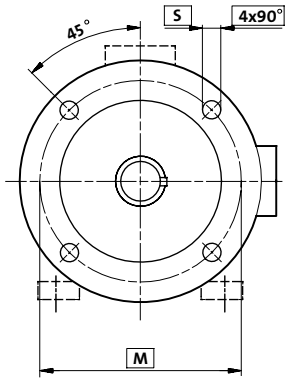

FF ≤ 350
Frame size ≤ 200

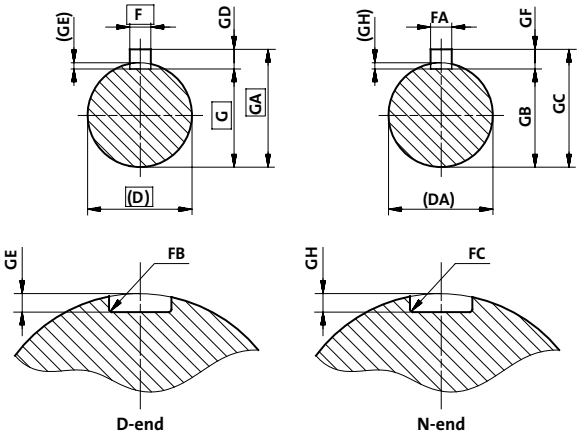

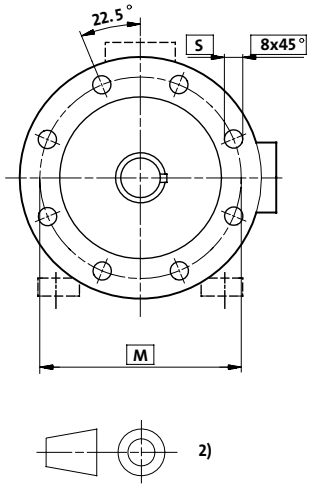

FF > 350
Frame size > 200

The dimensioning of Grundfos motors is made according to the standard.

IEC 60072-1 and EN 50347
Mechanical design characteristics

Dimensions of motor foot

All motors comply with the foot dimensions in the EN 50347 standard. Dimensions for motors with height of shaft end from 56 mm til 450 mm.

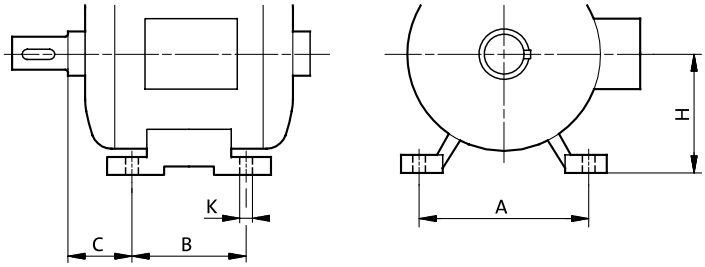

	H	A	B	C	K	
Frame size	Nominal mm	mm	mm	mm	Nominal mm	Bolt or screw
56M	56	90	71	36	5.8	M5
63M	63	100	80	40	7	M6
71M	71	112	90	45	7	M6
80M	80	125	100	50	10	M8
90S	90	140	100	56	10	M8
90L	90	140	125	56	10	M8
100L	100	160	140	63	12	M10
112M	112	190	140	70	12	M10
132S	132	216	140	89	12	M10
132M	132	216	178	89	12	M10
160M	160	254	210	108	14.5	M12
160L	160	254	254	108	14.5	M12
180M	180	279	241	121	14.5	M12
180L	180	279	279	121	14.5	M12
200M	200	318	267	133	18.5	M16
200L	200	318	305	133	18.5	M16
225S	225	356	286	149	18.5	M16
225M	225	356	311	149	18.5	M16
250S	250	406	311	168	24	M20
250M	250	406	349	168	24	M20
280S	280	457	368	190	24	M20
280M	280	457	419	190	24	M20
315S	315	508	406	216	28	M24
315M	315	508	457	216	28	M24
315	315	560	630	180	26	M24
355	355	630	800	200	33	M24
400	400	710	900	224	33	M24
450	450	800	1000	250	39	M24

IEC 60072-1 and EN 50347
Mechanical design characteristics

Free-hole and tapped-hole flange dimensions

All motors comply with the flange dimensions stated in EN 50347.

For motors which have both foot-mounted motor and (free-hole) flanges, the dimensions A, B and C have to be indicated (foot-mounted motor dimensions).

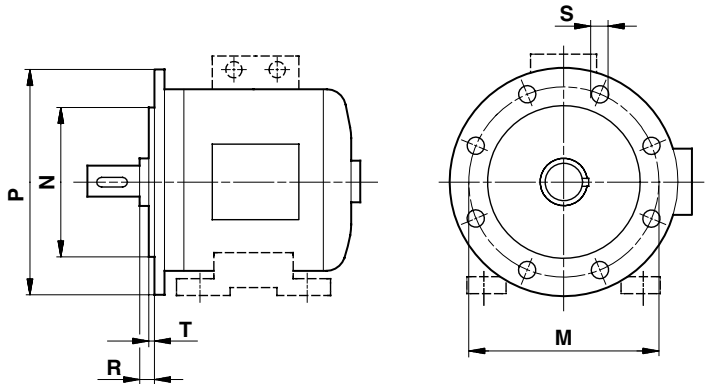

Flange Number FF or FT	M	N	P	R	Number of holes	S		T
	mm	mm	mm	mm		Free-holes (FF) mm	Tapped-holes (FT)	mm
65	65	50	80	0	4	5.8	M5	2.5
75	75	60	90	0	4	5.8	M5	2.5
85	85	70	105	0	4	7	M6	2.5
100	100	80	120	0	4	7	M6	3
115	115	95	140	0	4	10	M8	3
130	130	110	160	0	4	10	M8	3.5
165	165	130	200	0	4	12	M10	3.5
215	215	180	250	0	4	14.5	M12	4
265	265	230	300	0	4	14.5	M12	4
300	300	250	350	0	4	18,5	M16	5
350	350	300	400	0	4	18.5	M16	5
400	400	350	450	0	8	18.5	M16	5
500	500	450	550	0	8	18.5	M16	5
600	600	550	660	0	8	24	M20	6
740	740	680	800	0	8	24	M20	6
940	940	880	1000	0	8	28	M24	6
1080	1080	1000	1150	0	8	28	M24	6

Shaft end dimensions

All motors comply with the shaft end dimensions, which are stated in the EN 50347 standard.

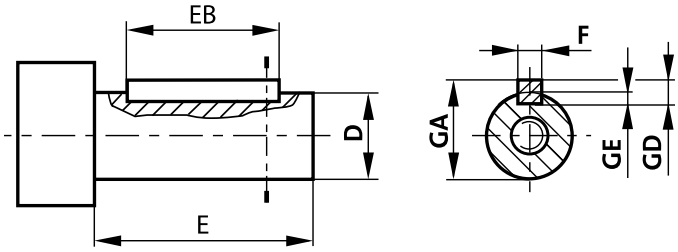

Frame size	Shaft		Shaft		Key			Keyway			Thread of centre
	Diameter		Diameter (D)	Length (E)	Length (EB)	Width (F)	Height (GD)	Width (F)	Depth (GE)	(GA)	(DB)
	Pole no.		Nominal mm	Nominal mm	Min. mm	Nominal mm	Nominal mm	Nominal mm	Nominal mm	Nominal mm	Thread
	2	4,6,8									
63M	11	11	11	23	16	4	4	4	2.5	12.5	M4
71M	14	14	14	30	22	5	5	5	3	16	M5
80M	19	19	19	40	32	6	6	6	3.5	21.5	M6
90S	24	24	24	50	40	8	7	8	4	27	M8
90L			28	60	50	8	7	8	4	31	M10
100L	28	28	38	80	70	10	8	10	5	41	M12
112M	28		42	110	90	12	8	12	5	45	M16
132S	38	38	48	110	100	14	9	14	5.5	51.5	M16
132M			55	110	100	16	10	16	6	59	M20
160M	42	42	60	140	125	18	11	18	7	64	M20
160L			65	140	125	18	11	18	7	69	M20
180M	48	48	70	140	125	20	12	20	7.5	74.5	M20
180L			75	140	125	20	12	20	7.5	79.5	M20
200L	55	55	80	170	140	22	14	22	9	85	M20
225S		60	90	170	140	25	14	25	9	95	M20
225M			100*	170	140	28	16	28	10	106	M20
250M	60	65	120*	210	180	32	18	32	11	127	M24
280S	65	75									
280M											
315S	65	80									
315M											
355	75	100									
400	80										
450	90	120									

* 100 and 120 out of EN 50347.

According to the EN 50347 standard, the shaft end on motors with frame size IEC 90 and up, have to be fitted with a thread. As standard, motors are fitted with keyway. Motors with keyway, always come with key mounted.

IEC 60072-1 and EN 50347
Mechanical design characteristics

Mechanical tolerances

The standard mechanical tolerances fully comply with IEC 60072-1 and EN 50347 standards.

Description	Fit or tolerance	Dimensional letter symbol according EN 50347	Dimensional letter symbol according to DIN 42939
Frame	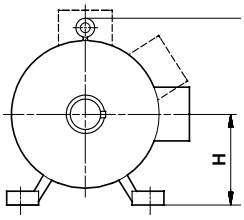		
Frame size, lower edge foot to centre of shaft		H	h
H ≤ 250	+0.0/- 0.5 mm		
H ≥ 280	+0/ - 1 mm		
Foot	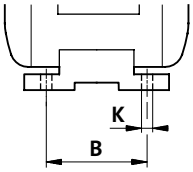 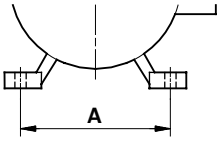		
Spacing of feet fixing holes in axial direction	1 mm	B	a
Spacing of feet fixing holes across axial direction	1 mm	A	b
Diameter of fixing holes of foot	H17	K	s
Frame	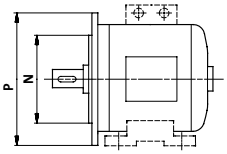 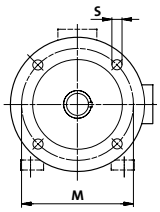		
Diameter or width across corners of attachment flange	only to minus side	P	a1
Diameter of flange spigot	Diameter ≤ 250 mm, j6 Diameter ≥ 300 mm, h6 equals... FF or FT ≤ 300 mm, j6 FF or FT ≥ 350 mm, h6	N	b1
Diameter of fixing holes of flange	H17	S	s1

Shaft and key

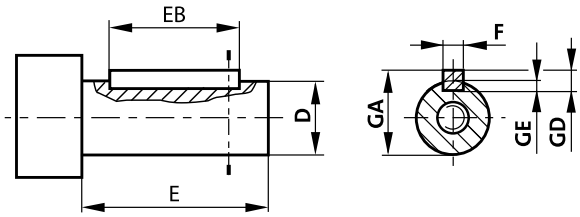

Diameter ø of shaft extension	Fit or tolerance	Dimensional letter symbol according to EN 50347	Dimensional letter symbol according to DIN 42939
11 to 28 mm	j6	D	d
32 to 48 mm	k6		
55 mm and above	m6		
Length of the shaft end from the shoulder at DE			
For ø shaft end ≤ 55 mm	– 0.3 mm	E	l
For ø shaft end ≥ 60 mm	– 0.5 mm		
Key with	h9	F	u
Key depth:			
Square section	h9	GD	-
Rectangular section	h11	EB	-
Lower edge of shaft end to upper edge key	+ 0.2 mm	GA	t
Width of drive shaft keyway	N9	F	-
Distance shaft shoulder - flange face, fixed bearing DE	± 0.5 mm	L	-

IEC 60072-1 and EN 50347
Mechanical design characteristics

IEC 60072-1 Measurement of tolerances

When a motor is dismounted because the bearings need to be replaced, it has to be tested for flange run-out and shaft end run-out according to the international standard IEC 60072-1.

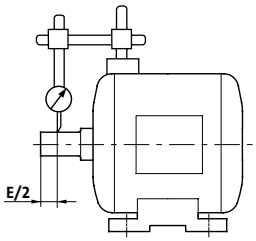

Shaft end run-out B3 motors

Shaft end run-out (radial run-out)

Shaft diameter	>10 up to 18 mm	>18 up to 30mm	>30 up to 50 mm	>50 up to 80 mm	>80 up to 120 mm
Run-out µm	35 µm (0.035 mm)	40 µm (0.040 mm)	50 µm (0.050 mm)	60 µm (0.060 mm)	70 µm (0.070 mm)

Max excentricity of shaft in flanged motors (standard class)

Apply the point of the indicator to the shaft, midway along its length. Read the maximum and minimum values on the indicator through one slow revolution of the shaft. The difference between the readings should not exceed the value given in the table above.
The test can be carried out with the motor set up in either a horizontal or vertical position and with the indicator fixed directly to it or mounted on a common surface plate supporting both motor and indicator.

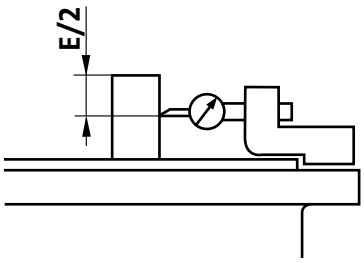

Shaft end run-out for B14/V18/B5/V1 motors

Concentricity of spigot on shaft

Flange (FF) or face plate (FT)	F 55 to F 115	F 130 to F 265	FF 300 to FF 500	FF 600 to F 740	FF 940 to FF 1080
µm	80 µm (0.08 mm)	100 µm (0.10 mm)	125 µm (0.125 mm)	160 µm (0.16 mm)	200 µm (0.20 mm)

Max tolerances of concentricity of spigot to shaft

Fix the indicator rigidly on the shaft end, at a distance of about 10 mm from the mounting face of the flange.

Read the maximum and minimum values on the indicator through one slow revolution of the shaft. The difference between the extreme readings of the concentricity test indicator must not exceed the values given above.

Test the motor set up with a vertical shaft so that the measurement is free from the pull of gravity.

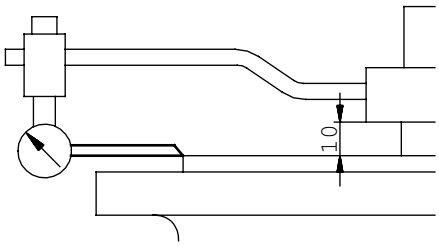

Concentricity of spigot to shaft

Fix the indicator rigidly on the shaft extension, at a distance of about 10 mm from the mounting face of the flange.

Read the maximum and minimum values on the indicator through one slow revolution of the shaft. The difference between the extreme readings of the perpendicularity indicator must not exceed the values given in the table below. We recommend testing the machine set up with a vertical shaft to eliminate the axial clearance in the bearing.

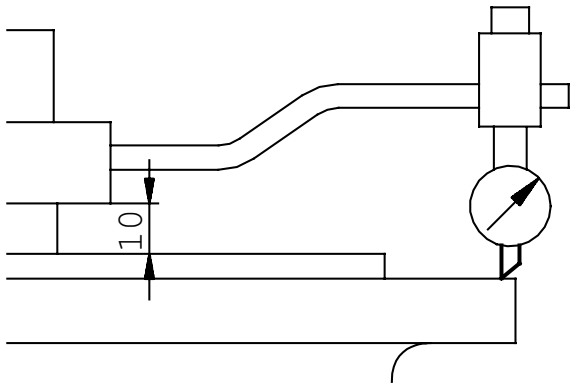

Perpendicularity of mounting face of flange to shaft

Flange (FF) or Face plate (FT)	F 55 to F 115	F 130 to F 265	FF 300 to FF 500	FF 600 to F 740	FF 940 to FF 1080
µm	80 µm (0.08 mm)	100 µm (0.10 mm)	125 µm (0.125 mm)	160 µm (0.16 mm)	200 µm (0.20 mm)

Parallelism of shaft to mounting surface

Limits of variation between measurements of H taken at extreme ends of shaft (mm)			
Frame size	Shaft length (mm)		
	<2.5 H	≥ 2.5 H ≤ 4 H	>4 H
> 56 up to 250	0,5	0.8	1
> 250 up to 315	1	1.5	2

NOTE: The tolerance is valid over the full length of the shaft, including shaft ends.

The measurement points for H may be over the total shaft length if both ends are accessible, or over the shaft end length (E) and the parallelism is calculated proportionally for the total shaft length.

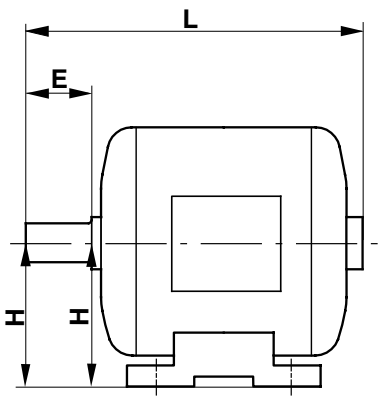

IEC 60072-1 Measurement of tolerances

Parallelism of keyway to shaft axis

The tolerance for parallelism has to comply with the table below. Parallelism of keyway to shaft axis is defined as the limit variation between the keyway median longitudinal plane and the theoretical keyway median longitudinal plane which contains the shaft axis. The distance between those two planes, taken at each end of the usable length of the keyway, has to lie within the limit values below.

EB (EC) nominal (mm)	Limit of deviation from theoretical position at extreme ends of EB (EC) (mm)
≤ 100 > 100	≤ 0.05 ≤ 0.0005 • EB (EC)

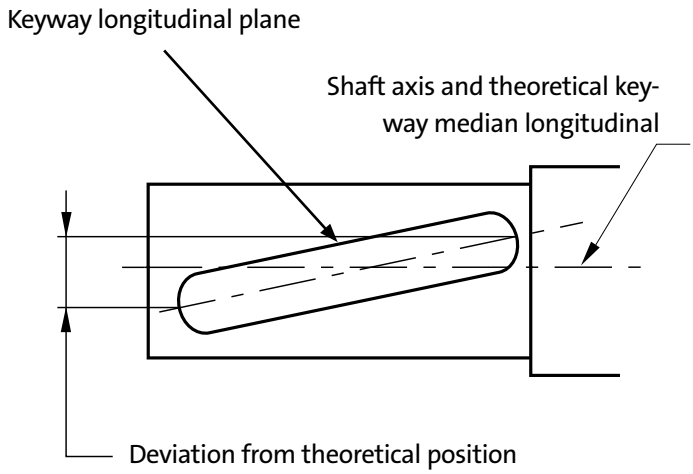

Lateral displacement of keyway

The tolerance for lateral displacement is 0.1 mm. Lateral displacement of keyway is defined as the greatest deviation at any point along the usable length of keyway. This deviation is the distance from the centre-line of the keyway to the plane through the centre-line of the shaft end perpendicular to the true position of the bottom of the keyway.

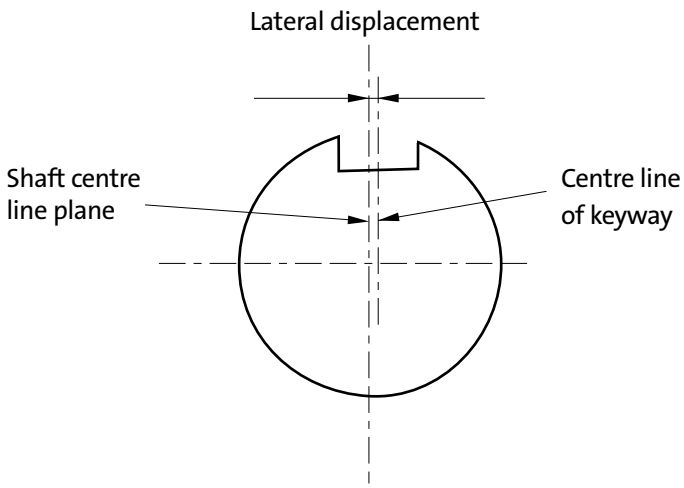

CE marking

The CE mark is the manufacturer's/importer's proof that the product meets the requirements stated in the relevant EU Directives and EN standards.

All products included in EU Directives and which are sold within EEA countries (EU member states, Norway, Iceland and Liechtenstein) have to carry the CE mark. The objective of the CE marking is to ensure and harmonise the safety level as to mechanical and electrical risks in connection with machines or electric devices in the EU. Once the product carries the CE mark, no country within the EEA can prohibit or prevent the product from being sold or installed.

The following EU Directives entail CE marking of the products they concern:

- **Machinery Directive 2006/42/EC**
  This directive prescribes that no machine can be sold or installed within the EU if it does not carry the CE mark.

- **EMC-Directive 2004/108/EC**
  This directive prescribes that no electrical device should be sold or installed in the EU if it does not carry the CE mark.

- **Low Voltage Directive 2006/95/EC**
  This directive prescribes that no electrical device which is supplied by a voltage exceeding 48 V can be sold or installed within the EU if it does not carry the CE mark.

Since 1995 all Grundfos products have complied with the rules for CE marking, which also applies for EEA countries. For non-EEA countries, there are no legal claims as to the CE marking. The CE marking is not a quality or approval certificate like the UL and VDE markings.

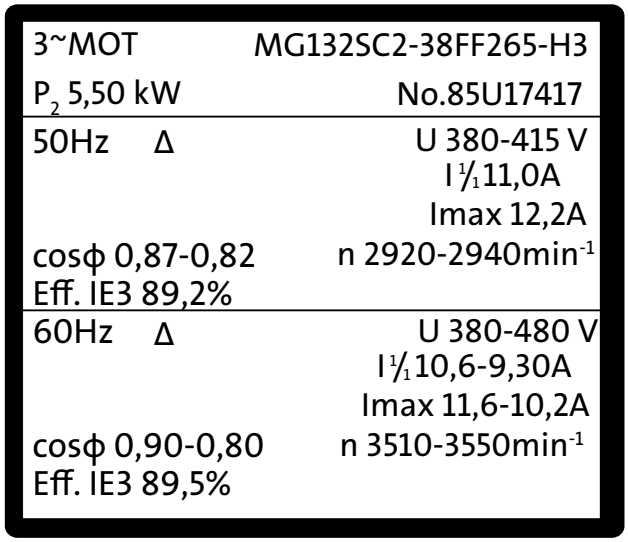

Approvals

Grundfos MG motors are available with cURus approval. The cURus approval is a UL and CSA component recognision. This implies that the actual UL approval has to be obtained when the motor is mounted in the application, e.g. on a pump. The cURus approval provide the right to use the following markings: recognised component mark and canadian recognised component mark.

Efficiency performance standards

Motor manufacturers have used the designation high-efficiency motor for many years. However, it is difficult for customers to distinguish between which motors were actually energy saving motors because the motor manufacturers all claim to manufacture high-efficiency motors.

EISA based on EPAct

Therefore, the American Congress introduced a new act – The Energy Policy Act of 1992 (EPAct). (Came into force on the 24 October 1997). The objective of the EPAct is to reduce the energy consumption in the US. Based on EPAct the EISA 2007 directive was forced into action the 19. of December 2010. The US Energy Independence and Security Act of 2007, defining minimum levels of nominal full load efficiencies for electric motors for the United States. Canada and Mexico has local legislation that synchronizes with EISA with minor deviations. Efficiency levels for EISA follows IEC 60034-30.

MEPS: Minimum Energy Performance Standards

MEPS is a specification containing a number of performance requirements for an energy-using device, and that effectively limits the maximum amount of energy that may be consumed by a product in performing a specified task.

A MEPS is usually made mandatory by a government energy efficiency body. It may include requirements not directly related to energy; this is to ensure that general performance and user satisfaction are not adversely affected by increasing energy efficiency.

A MEPS generally requires use of a particular test procedure that specifies how performance is measured.

Some examples of MEPS are:

EU :	Ecodesign Directive 2009/125/EC
USA :	EISA 2007
Canada :	CSA C390
Mexico :	NOM 016
Australian :	AS/NZS 1359.5:2006

Mandatory Labeling

Additionally to the MEPS, some countries are specifying mandatory labeling programs.

Examples of mandatory labelling programs are:

EU :	CE only allowed for motors fulfilling the Ecodesign Directive 2009/125/EC
USA :	CC for US energy efficiency approval, EISA 2007
China :	CEL energy label
Brazil :	INMETRO energy label
Korea :	KEMCO energy label

CEMEP

In Europe a similar initiative has been taken to reduce the energy consumption. The European agreement on the classification of electric standard motors came into force in 1999. The agreement is a result of the cooperation between the European Commission and CEMEP (European committee of manufacturers of electric machines and electronics). The objective has been to reduce the energy consumption of industries by using motors with higher efficiency. This agreement has been non-compulsory with the three former efficiency classes EFF1, EFF2 and EFF3. These efficiency classes are not valid anymore and have been replaced with new efficiency classes IE3, IE2 and IE1 according to IEC 60034-30.

Ecodesign Directive 2009/125/EC and IEC 60034-30

New definitions of efficiency classes have been launched with IEC 60034-30.

Extensive legislation has been passed in the European Union with the objective to reduce the energy consumption and thereby CO2 emissions. Energy usage and the efficiency of induction motors in the industrial environment is discussed in the Ecodesign Directive 2009/125/EC (Commission Regulation 640/2009).
Now the MEPS from this directive has been implemented in legislation in all countries of the European Union.

In the past efficiency class nomenclature was different, EU had the Eff classification and USA had the NEMA Premium and NEMA energy efficiency classification. Bridges have been build to find one common way of measure and classify motor efficiency, namely with the IE classifying system.

Today IEC 60034-30 sets the energy efficiency requirements both for EISA and the Ecodesign Directive. Also the rest of the world are using the IEC 60034-30 as basis when defining local energy efficiency demands for motors.

Motors covered by the Ecodesign Directive 2009/125/EC

- Totally enclosed fan-cooled (normally IP 54 or IP 55 protected), three-phase squirrel-cage induction motors
- From 0.75 kW up to 375 kW motors
- 2, 4- and 6-pole motors
- Rated voltage up to 1000 V
- 50 Hz motors
- For duty range S1 operation
- Standard design
  (Design N according to EN 60034-12.)

Motors, not covered by the Ecodesign Directive 2009/125/EC

- Certain three-phase motors
- Explosion proof motors
- Braking motors
- Single-phase motors

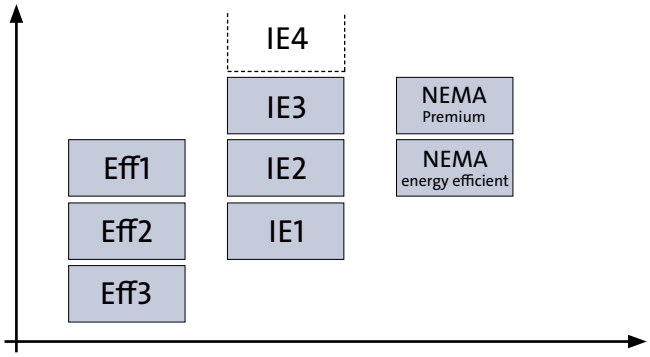

Comparision of efficiency classes

IE efficiency classes according to IEC 60034-30

Efficiency performance standards

Ecodesign Directive 2009/125/EC requirements

Motor manufacturers must comply with the requirements stated in the Ecodesign Directive 2009/125/EC by doing the following:

- Classify their motors within the three IE efficiency classes: IE3, IE2 or IE1.
- Specify motor efficiency in percentage of full-load, of 3/4 load and of 1/2 load in catalogues.
- Indicate the IE efficiency class on the motor's nameplate.

Time schedule for the Ecodesign Directive 2009/125/EC

Motors must live up to the newest efficiency classes stated by the Ecodesign Directive 2009/125/EC.

- from 16 June 2011, motors shall not be less efficient than the IE2 efficiency level.
- from 1 January 2015, motors with a rated output of 7,5-375 kW shall not be less efficient than the IE3 efficiency level, or meet the IE2 efficiency level and be equipped with a variable speed drive.
- from 1 January 2017, all motors with a rated output of 0,75-375 kW shall not be less efficient than the IE3 efficiency level, or meet the IE2 efficiency level and be equipped with a variable speed drive.

Determination of motor efficiencies

IEC 60034-30 states the efficiency levels for the IE efficiency classes IE3, IE2 and IE1.

IEC 60034-2-1 states how the efficiencies are to be measured for the motors. A motor's efficiency is determined on the basis of the summation of losses method according to IEC 60034-2-1 and normative references:

- Tolerances have to comply with IEC 60034-1.
- For motors with thermal protection where the winding temperature rise during nominal operating conditions is 10K below the permissible limiting value the following reference temperature can be applied as a guideline: the actual rise in the winding temperature is + 15 K.
- To ensure a representative test result of friction and windage loss the test has to be carried out under stable bearing lubrication conditions and in accordance with common practice. If the motor is fitted with seal rings, they have to be removed before the testing.
- The same reference temperature (winding temperature) is used in connection with 3/4 load and full load.

P_N kW	Number of poles		
	2	4	6
0.75	80.7	82.5	78.9
1.1	82.7	84.1	81.0
1.5	84.2	85.3	82.5
2.2	85.9	86.7	84.3
3	87.1	87.7	85.6
4	88.1	88.6	86.8
5.5	89.2	89.6	88.0
7.5	90.1	90.4	89.1
11	91.2	91.4	90.3
15	91.9	92.1	91.2
18.5	92.4	92.6	91.7
22	92.7	93.0	92.2
30	93.3	93.6	92.9
37	93.7	93.9	93.3
45	94.0	94.2	93.7
55	94.3	94.6	94.1
75	94.7	95.0	94.6
90	95.0	95.2	94.9
110	95.2	95.4	95.1
132	95.4	95.6	95.4
160	95.6	95.8	95.6
200 up to 375	95.8	96.0	95.8

Nominal limits (%) for Premium Efficiency (IE3) 50 Hz, IEC 60034-30

P_N kW	Number of poles		
	2	4	6
0.75	77.0*	85.5	82.5
1.1	84.0	86.5	87.5
1.5	85.5	86.5	88.5
2.2	86.5	89.5	89.5
3.7	88.5	89.5	89.5
5.5	89.5	91.7	91.0
7.5	90.2	91.7	91.0
11	91.0	92.4	91.7
15	91.0	93.0	91.7
18.5	91.7	93.6	93.0
22	91.7	93.6	93.0
30	92.4	94.1	94.1
37	93.0	94.5	94.1
45	93.6	95.0	94.5
55	93.6	95.4	94.5
75	94.1	95.4	95.0
90	95.0	95.4	95.0
110	95.0	95.8	95.8
150	95.4	96.2	95.8
185 up to 375	95.8	96.2	95.8
*This value has been copied from NEMA, MG1 and is not a typing error			

Nominal limits (%) for Premium Efficiency (IE3) 60 Hz, IEC 60034-30

DIN 44082 Characteristics of thermistors

The resistance of the thermistor increases immediately when it reaches its reaction temperature. The thermistor has to be connected to a control circuit that can transform the resistance change to a control signal which is able to cut the mains current to the motor.

How does a thermistor work?

The critical values of the resistance/temperature characteristic for motor-protection sensors are defined by DIN 44081/DIN 44082.

The DIN curve to the right shows the resistance in the thermistor sensor as a function of the temperature.

The PTC thermistor has the following advantages compared to the PTO thermal switch:

- Quick reaction because of lower volume and mass
- Better contact with the winding
- Sensors on each phase

Thermal protection for a motor with PTC

Motor protection against thermal overload with slow and rapid variation can only be achieved when the PTC sensors is entirely incorporated in the coil end. Motor protection against thermal overload with slow variation is only achieved in connection with retrofitting.

The motor must be tested and approved by the manufacturer to verify the protection against thermal overload with slow or rapid variation. All Grundfos 3 phase MG motors with PTCs are with protection against thermal overload with slow and rapid variation.

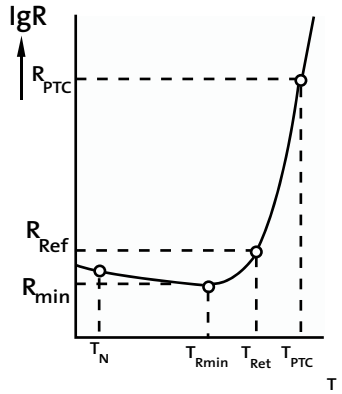

Resistance versus temperature characteristic of a PTC thermistor (DIN 44081/44082)

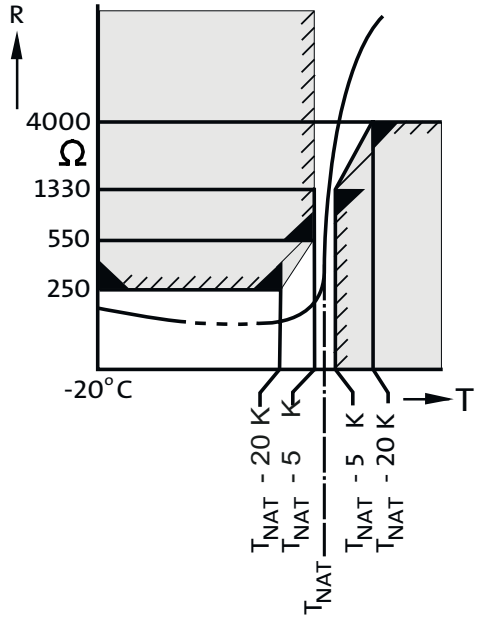

Critical limits of the resistance temperature characteristic for motor protection sensors.

T_{NAT} = tripping temperature for the thermistor

The curves cover one sensor unit.
Values must be trippled to cover the motor PTC

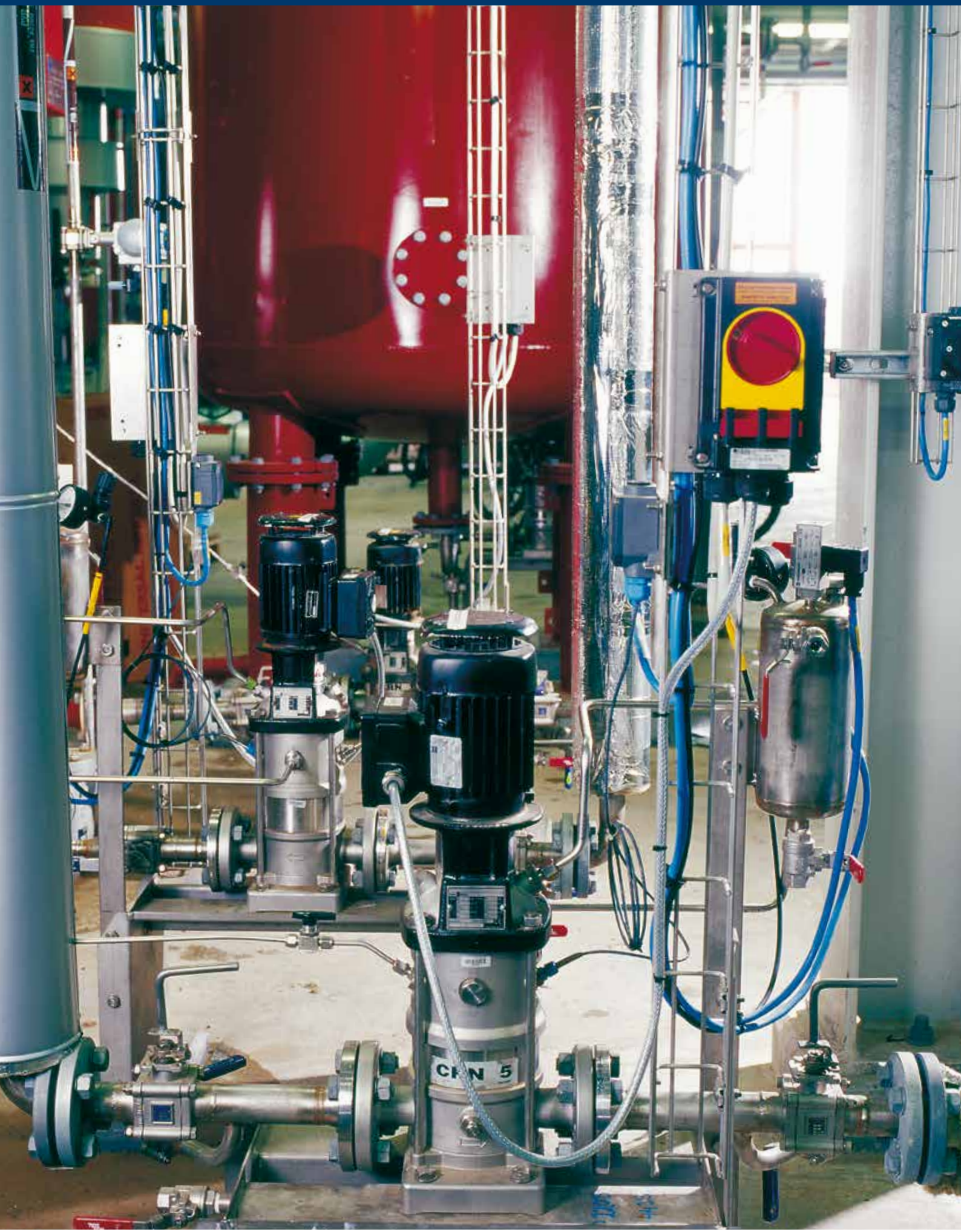
CRN 5

5. Explosion-proof motors - ATEX

What is ATEX? 84
What is an explosive atmosphere? 84
Source of ignition 86
What kind of equipment does the ATEX directive cover? 87
1 July 2003 87
Which obligations do the ATEX directive 99/92/EC imply for the equipment user? 87
How an explosive atmosphere is divided into zones 88
Zone 0 88
Zone 1 88
Zone 2 88
How to ensure compliance with the ATEX directives? 89
Who is responsible for meeting the requirements in the ATEX directive? 89
The manufacturer 89
The user 89
The service engineer: 90
How to choose the right motor for areas with non-conductive dust? 91
The difference between category 2 and 3 motors for use in areas with combustible dust 92
Category 2 92
Category 3 92
How to choose the right pump or motor 93
Selection of equipment 93
Temperature classes 93
How to choose the right pump or motor for areas with explosive atmosphere? 95
Grouping of gases 95
Temperature classifications 96
Standards and methods of protection EExd, EExe and ExnA 97
Flameproof motors - protection type EExd 98
Construction of flameproof motors 98
Characteristics of flameproof motors 98
Typical applications for flameproof motors 99
Increased safety motors - protection type EExe 99
Construction of increased safety motors 100
Characteristics of increased safety motors 100
Time t_E 101
Typical applications for increased safety motors EEx e 101
Non-sparking motors - protection type ExnA 102
Construction of non-sparking motors 102
Characteristics of the non-sparking motor 102
Typical applications for non-sparking motors 102
Combined equipment 103
Assemblies and their characteristics 104
Installations and electric connections 104
Service and maintenance 105
What Grundfos can offer 107

What is ATEX?

ATEX (ATmosphère EXplosible) refers to two new EU directives about danger of explosion within different areas. The first ATEX directive (94/9/EC) deals with requirements put on equipment for use in areas with danger of explosion. The manufacturer has to fulfil the requirements and mark his products with categories. The second ATEX directive (99/92/EC) deals with the minimum safety and health requirements that the owner of the equipment has to fulfil, when working in areas with danger of explosion.

What is explosive atmosphere?

According to the new directives, dust is now considered an explosive atmosphere.
An explosive atmosphere is an atmosphere that develops explosively because an uncontrolable combustion. Explosive atmosphere consists of air and some sort of combustible material such as gas, vapours, mists or dust in which the explosion spreads after ignition. Typical examples of productions where combustible dust is of major concern, is the handling of cereals, animal feed, paper, wood, chemicals, plastics and coal.

Examples of sources of ignition that can cause the atmosphere to explode:

- Electrical sparks
- Flames
- Hot surfaces/ spots
- Static electricity
- Electromagnetic radiation
- Chemical reaction
- Mechanical forces
- Mechanical friction
- Compression ignition
- Acoustic energy
- Ionising radiation

What is ATEX?

An explosion is an uncontrolled combustion wave that produces a rapid increase in temperature and pressure. For an explosion to take place, three elements have to be present at the same time: fuel, (such as explosive gas) an oxidiser, (such as the oxygen in the air) and a source of ignition, (such as electrical sparks). The combination of these three elements is generally referred to as the Fire Triangle.

To generate a potentially explosive atmosphere, the mixture of fuel and oxidiser has to have a certain concentration. This concentration depends on the ambient pressure and the content of oxygen in the air, and is referred to as the explosion limits. Outside these limits, the mixture of fuel and oxidiser will not ignite, but has the potential to do so if the proportions change. For an explosive atmosphere to form, a certain concentration of combustible material must be present.

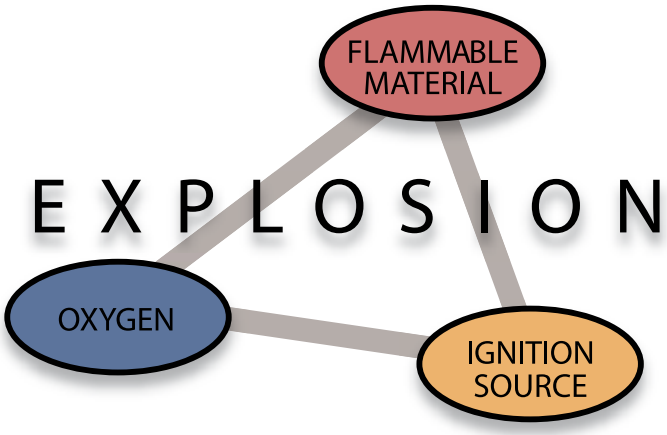

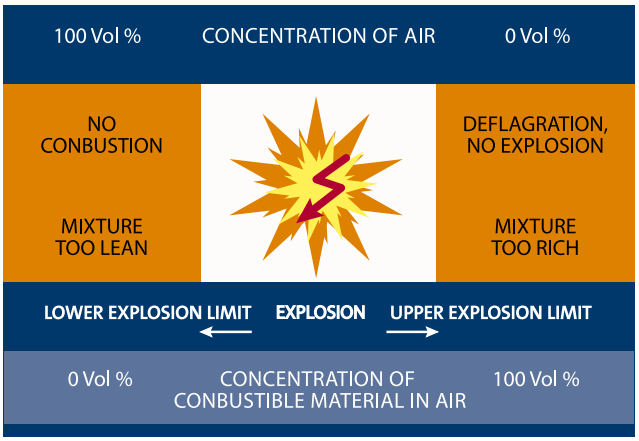

What is ATEX?

Actually the mechanism is simple: When the concentration of combustible material is too low (lean mixture) or too high (rich mixture), no explosion will take place. In that case only a slow combustion or none at all will occur. It is solely within the range of the upper and the lower explosion limit that the mixture of fuel and oxidiser reacts explosively when exposed to a source of ignition.

Substance designation	Lower explosion limit [Vol. %]	Upper explosion limit [Vol. %]
Acetylene	2.3	78.0 (self-decomposing)
Ethylene	2.3	32.4
Gasoline	0.6	8
Benzol	1.2	8
Natural gas	4.0 - 7.0	13.0 - 17.0
Heating oil/diesel	0.6	6.5
Methane	4.4	16.5
Propane	1.7	10.9
Carbon disulphide	0.6	80.0
Town gas	4.0 - 6.0	30.0 - 40.0
Hydrogen	4.0	77.0

Source: Explosion Limits of selected Gases and Vapours Extract from the table "Safety characteristics of flammable gases and vapours" by K. Nabert and G. Schön - (6th addendum)

Source of ignition

For an explosive atmosphere to ignite, a certain quantity of energy has to be present. Minimum ignition energy is defined as the smallest possible amount of energy that is converted during the discharge of a capacitor. It is the amount of energy that is just enough to ignite the most ignitable mixture of fuel and oxidiser. The minimum ignition energy is around 5 - 10 joules for hydrogen and a few joules for certain types of dust.

What kind of equipment does the ATEX directive cover?

- Safety equipment and safety systems exposed to explosive gasses or dust.
- Safety, control and adjustment devices, which ensure a safe operation of production material and control equipment.
- Electrical, mechanical, hydraulic and pneumatic equipment including pumps and electric motors.

1 July 2003

Companies that produce, use or distribute this kind of equipment must comply with the basic safety and health requirements in the ATEX directive.
The ATEX directive 94/9/EC does not have retroactive effect. However, already existing products must be subject to analysis. In case of defects (wear etc.), the old products must be replaced with equipment that complies with the ATEX directive. In addition, products that are specially made for use in areas with high explosion risk (zone 0 or 20) should only be marketed when they fully comply with the ATEX directive. Grundfos pumps, which were originally supplied with an Ex motor, may only be replaced or resold when they comply with the ATEX directive.

Which obligations do the ATEX directive 99/92/EC imply for the equipment user?

To prevent explosion, the user of the equipment must:

- Take the necessary technical and organisational precautions.
- Make a complete estimate of the risk of explosion
- Divide potential explosive risk areas, into zones.
- Indicate the danger zones clearly.

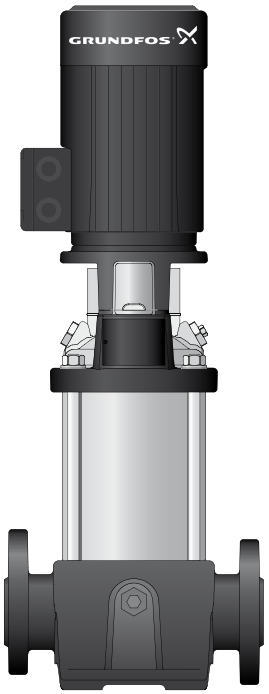

How an explosive atmosphere is divided into zones

The ATEX directive 99/92/EC distinguishes between two types of explosive atmospheres: gas and dust. Areas subjected to these two kinds of explosive atmospheres are each divided into three zones. The zone's characteristics are identical for gas and dust, but their numbering is different. Zones 0, 1, 2 refer to gas and zones 20, 21, 22 refer to dust.

Zone 0 / 20: Constant danger

Permanent presence of explosive gasses or combustible dust. Minimum category 1 equipment.

Zone 1 / 21: Potential danger

Occasional presence of explosive gasses or combustible dust during normal duty. Minimum category 2 equipment.

Zone 2 / 22: Minor danger

Presence of explosive gasses or combustible dust not likely to occur or only for a shorter period of time. Minimum category 3 equipment.

Grundfos manufactures pumps, with motors in both category 2 and category 3. The illustration on your right shows the division of an area into zones with different levels of danger of explosion. For each of the three zones it is only a certain category of equipment – in this case motors – that can be used due to danger of explosion.

The owner of the equipment is responsible for defining whether an area is to be considered hazardous within the regulations stated in the ATEX directive. However, if the user has any doubts about the definition of hazardous areas, he has to contact the proper authorities for advice.

In Denmark the proper authority is the local Emergency Management Agency.

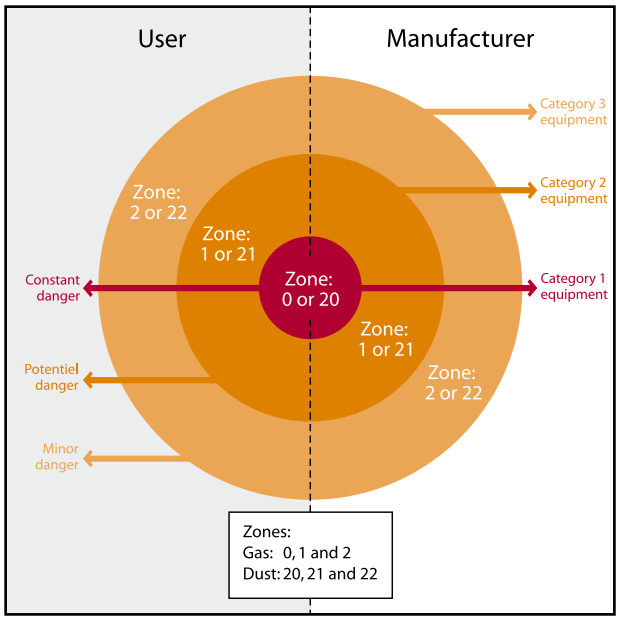

The link between zones and equipment categories, is a minimum requirement. If the national rules are more strict, they are the ones to follow

How to ensure compliance with the ATEX directives?

Equipment and zones have to comply with the ATEX directive. The CE marking is the proof that the equipment is manufactured according to all the basic requirements and assessment procedures that apply for every EU member state.

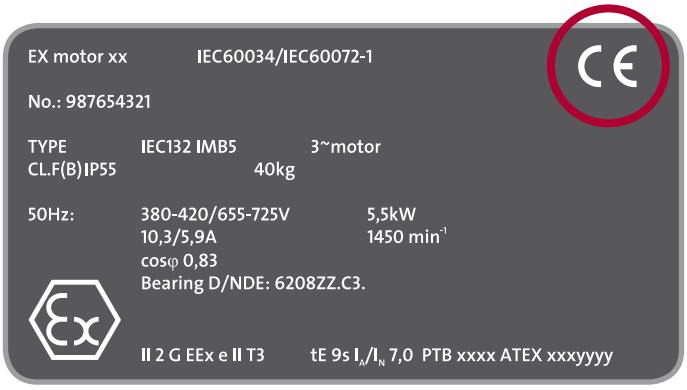

Who is responsible for meeting the requirements in the ATEX directive?

Depending on whether you are the equipment manufacturer, owner or service engineer there are certain safety requirements that you have to fulfil.

The manufacturer

As manufacturer Grundfos is exclusively responsible for producing equipment that meets the requirements stated in the EU directive.

The user

The equipment owner has to inform Grundfos of what kind of equipment he needs, as to:

- Category, e.g. 2G
- Temperature, e.g. 125°C
- Type of motor protection, e.g. EExe II T3

In addition, the equipment owner has to use the product according to the defined zones and thereby take any possible risks into account. Likewise, the equipment owner is responsible for ensuring that the equipment runs safely through continuous maintenance. As per 1 July 2003, new installations must meet the requirements stated in the ATEX directive. If the equipment owner is also the manufacturer, the owner has to fulfil the requirements for both. Already existing installations have to comply with the requirements in the ATEX directive 99/92/EC by the latest on the 30rd june 2006.

Who is responsible for meeting the requirements in the ATEX directive?

The service engineer:

Service engineer are not covered by the directive 94/9/EC. However, Service engineers have to make sure that the work they conduct meets the safety demands that apply for products and equipment, so that the safety is not put at risk. Notified bodies such as KEMA and PTB have the authority to issue qualification certificates to service engineers as a proof of their know-how. The supplier's service and quality department can issue qualification certificates as well.

The requirements in the ATEX directive are not entirely new to electric motors. Previously, they were placed under the IEC60079 standard and under local standards in countries around the world. The ATEX directive includes references to EN standards that contain the same requirements as the IEC60079 standard. The IEC60079 standard still applies for electric motors in other parts of the world.

How to choose the right motor for areas with non-conductive dust?

How to choose the right motor for areas with non-conductive dust?

When the area has been divided into zones, it is time to move a step further and decide which pump or motor to install in that specific area. Depending on the zone classification, certain rules have to be respected:

If an area is classified as zone 20, (area with constant danger of explosion) it excludes any use of pumps or motors. If the area is classified as zone 21, (area with potential danger of explosion) the motor has to be approved by a notified body before it is installed. The motor manufacturer is responsible for having his prototype approved by the notified body for use in specific areas. If the area is classified as a zone 22 area, (area with minor danger of explosion) any motor that is dust ignition proofed by the manufacturer, can be use unless conductive dust is present.

When deciding which motor to use in an explosion-risk area, it is important to take dust's ignition temperature into account in order to avoid explosion.

- The ignition temperature for a cloud of dust has to be at least 1/3 higher than the motor's marking temperature.
- The ignition temperature of a 5 mm layer of dust has to be minimum 75°C higher than the motor's marking temperature (see previous page).

It is exclusively the user's responsibility to see to it that the layer of dust does not exceed the 5 mm, through regular maintenance.
Ignition temperatures for different types of dust are available in reference tables like the one shown on your right.

$$X^\circ = Y^\circ + 75^\circ C$$

X °C = Ignition temperature for a 5 mm dust layer

Y °C = Motor surface temperature, e.g. 125° C

In areas with dusty air, dust is likely to be found on the pump and the motor

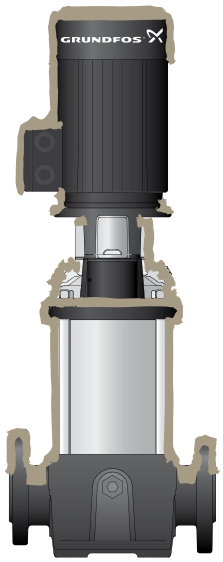

$$Z^\circ \geq Y^\circ + Y^\circ/3$$

Z °C = Ignition temperature for dust cloud

Y °C= Motor surface temperature, e.g. 125°C

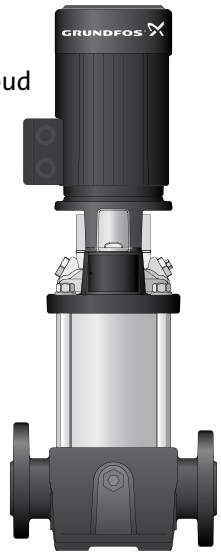

Ignition temperatures		
Material	**Cloud**	**5 mm layer**
Wheat	420°C	200°C
Corn	400°C	250°C
Sugar	350°C	420°C
Lignite	450°C	200°C
Sulphur	40°C	250°C

Source: BIA-report 13/97
Combustion and explosion characteristics of dust

The difference between category 2 and 3 motors for use in areas with combustible dust

Category 2

In order to avoid static electricity to cause ignition, the cooling fan on a category 2 dust ignition-proof motor for use in zone 21 (area with potential danger of explosion) is made of metal or other anti-static materials. Likewise, to minimise the risk of ignition, the external ground terminal is subject to more severe demands of construction. The temperature, which is indicated on the motor's nameplate, corresponds to the running performance during the worst conditions allowed for the motor. Motors for use in zone 21 (areas with potential danger of explosion) has to be IP6X protected, that is completely protected against dust.

Category 3

The temperature indicated on a category 3 dust ignition - proof motor for use in zone 22 (areas with minor danger of explosion) corresponds to the running performance under the worst conditions allowed for that specific motor. A motor for use in zone 22 has to be IP5X protected, that is protected against dust and have an external grounding terminal.

	Zone 20	
Dust	Conducting	Non-conducting
Index protection	IP6X	IP6X
Product marking	II 1 D	II 1 D

Motors may not operate in zone 20.

	Zone 21	
Dust	Conducting	Non-conducting
Index protection	IP6X	IP6X
Product marking	II 2 D	II 2 D

	Zone 22	
Dust	Conducting	Non-conducting
Index protection	IP6X	IP5X
Product marking	II 2D	II 3 D

How to choose the right pump or motor

You are on the lookout for a motor that can be integrated in your sugar production plant. Waste of sugar, in the shape of dust, is a natural consequence of your production. In order to create a safe working environment with no danger of explosion, you have to consider several factors when choosing motors for your pumps.

Sugar dust is a non-conducting kind of dust

The self-inflammation temperature for sugar depends on its concentration:

- For sugar in a layer, the self-inflammation temperature is 420°C
- For sugar in a cloud, the self-inflammation temperature is 350°C

Selection of equipment

The motor's Index Protection classification, (IP) determines in what zone the motor is allowed to operate.

IP6X motors can be used in zone 21
and,
IP5X motors can be used in zone 22

Temperature classes

When you determine the motor's temperature class, you have to take the ignition temperature for different concentrations of sugar dust into account.

- Sugar dust in a layer

The ignition temperature for a 5 mm layer of sugar dust is 420°C and as mentioned previously, its minimum ignition temperature must be 75°C higher than the motor's rated temperature. So, the maximum temperature that a layer of sugar dust can attain before it ignites is calculated in the following way:

420°C – 75°C = 345°C

How to choose the right pump or motor

The maximum product temperature is indicated on the motor's nameplate: **II 2D T125°C maximum.**

Normally, standard DIP motors are marked with 125 °C as the maximum product temperature. And as you can tell from the example above, 125°C is thus lower than the 345°C.

- Sugar dust in a cloud

The ignition temperature for sugar in a cloud of dust is 350°C, and as mentioned previously, its minimum ignition temperature must be 1/3 higher than the motor's rated temperature. So, the maximum temperature that sugar dust in a cloud can attain before it ignites, is calculated in the following way:
2/3 of 350°C = 233°C

The maximum product temperature is indicated on the motor's nameplate: **II 2D T125°C maximum.**

Normally, standard DIP motors are marked with 125°C as the maximum product temperature. And as you can tell from the example above, 125°C is thus lower than the 233°C.

If both sugar in a layer and sugar dust in a cloud is present at the same time, the temperature indication on the equipment has to correspond to the maximum surface temperature of both pump and motor. And as mentioned before, 125°C is the standard rating most motor manufactures indicates on the nameplate for DIP motors.

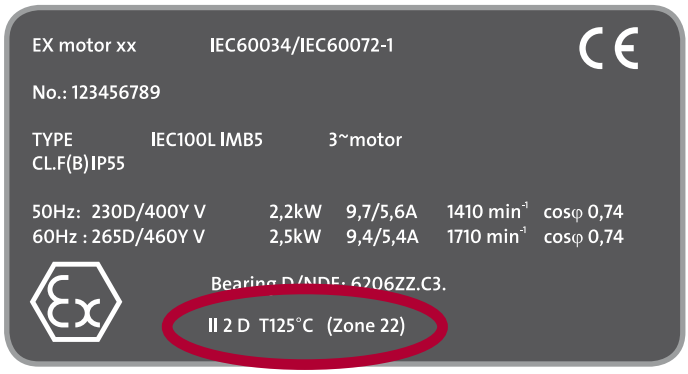

How to choose the right pump or motor for areas with explosive gases

When the area has been divided into zones, it is time to move a step further, and decide which motor to install in that specific area. There are certain factors to take into consideration when determining which motor to use in an explosive atmosphere.

Grouping of gases

Gases are divided into the following two explosion groups depending on which kind of industry the equipment is to operate in: Explosion group I an II.

- Explosion group I: Mines and other underground industries
- Explosion group II: Off-shore industries and industries above ground

Explosion group II is divided into 3 subgroups, II A, II B and II C. The group only applies for EExd motors, which corresponds to the type of gas the motor is made to withstand if an internal explosion occurs.

A gas which is classified as a group IIC gas, designates that it is the most explosive gas possible. The table at your right shows examples of different kinds of gases and their explosion group classification.

The danger of gas explosion increases from group IIA to group IIC; Depending on which group the specific gas belongs to, the requirements for pumps and motors increase accordingly. The higher the dangers of explosion, the stricter are the requirements to the equipment. Therefore, it is a requirement that electrical equipment carries a clear marking of what explosion group it belongs to. An electric motor that is approved as IIC equipment may also be used for other explosion groups – since IIC is considered the most dangerous explosion group.

Typical gas hazard	Gas group
Acetylene	IIC
Hydrogen	IIC
Ethylene	IIB
Propane	IIA
Methane	I (firedamp) mining IIA industrial

The content of this table only applies to EExd motors

How to choose the right pump or motor for areas with explosive gases

Temperature classifications

Auto-ignition temperature is the temperature at which a gas will ignite spontaneously without any other source of ignition. When hot surfaces are in contact with an explosive atmosphere, auto-ignition is likely to occur. The table below shows the classification, which is used to indicate the maximum surface temperature that a given piece of electrical equipment can reach when it is running normally. Generally, the maximum surface temperature is based on a surrounding temperature of 40°C. Equipment's T-classification can be compared with the auto-ignition temperature for gases. Once the T-classification is determined, decisions concerning the equipment's use in areas with explosive atmosphere are made.

The table below shows the temperature classification for different types of gases classified according to explosion group IIA, IIB or IIC.

Regarding EExd motors the temperature classification is an expression of the maximum external temperature of the motor .

In connection with EExe and ExnA motors, the temperature classification is an expression of the temperature inside and outside the motor.

As far as dust is concerned, the most common external temperature designation is the precise temperature of the motor.

X °C ≥ T1, T2, T3...

X °C = Ignition temperature for gas

Y °C = Motor temperature; T1, T2, T3...

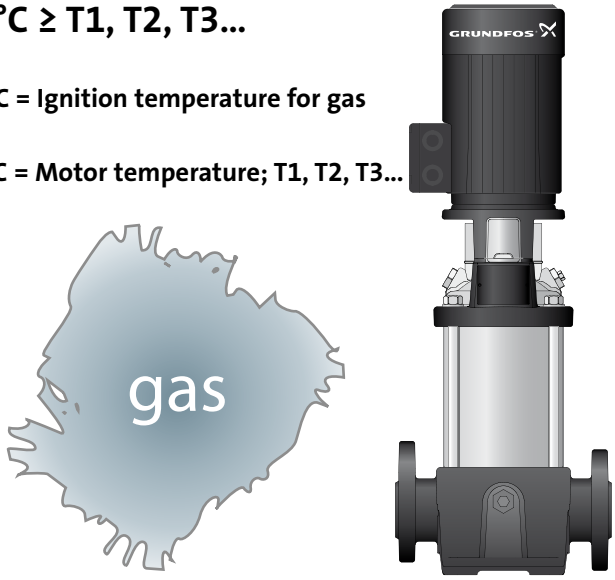

Pump and motor in areas exposed to explosive gases

Temp. class.	Maximum surface temperature C	Categorisation of gases and vapours		
		IIA	IIB	IIC
T1	450°C	Methane Ammonia		Hydrogen
T2	300°C	Butane	Ethylene	Acetylene
T3	200°C	Kerosene Cyclohexane		
T4	135°C	Acetalde-hyde	Diethyl Ether	
T5	100°C			
T6	85°C			Carbon Disulphide

Temperature classification for gases
The categories only apply to EEx d motors

Standards and methods of protection EExd, EExe and ExnA

Different techniques are used to prevent electrical equipment from becoming a source of ignition. The following table shows the concepts and standards for electrical appliances for gases, vapours and mists.

In the case of electric motors, protection type d (flameproof), e (increased safety) and n (non-sparking) are applied. On the following pages, we will present the three protection types in detail.

Type of Protection	Code	Standards		Use in ATEX category/ zone	Principle	Application
		CENELEC EN	IEC 60079			
General requirements	-	50014	- 0	-	Basic electrical requirements	All equipment
Oil immersion	o	50015	- 6	Category 2 Zone 1	Electric components immersed in oil excluding explosive atmosphere from igniting	Transformers
Pressurised	p	50016	- 2	Category 2 Zone 1	Enclosure housing equipment is purged to remove explosive atmosphere and pressurised to prevent ingress of / from the surrounding atmosphere	Switching and control cabinets, large motors
Powder filled	q	50017	- 5	Category 2 Zone 1	Electric parts are surrounded with powder e.g. quartz to prevent contact with an explosive atmosphere	Electronic devices e.g. capacitors, fuses
Flameproof	d	50018	- 1	Category 2 Zone 1	Enclosure housing of electric equipment will not ignite surrounding atmosphere, if there is an internal explosion,	**AC motors**, Control Panels, light fittings
Increased safety	e	50019	- 7	Category 2 Zone 1	Additional methods are used to eliminate arcs, sparks and hot surface capable of igniting flammable atmosphere	**AC motors**, terminal and connection boxes, light fittings, squirrel cage motors
Intrinsic safety	i_a i_b	50020 50020	- 11 - 11	Category 1 Zone 0 Category 2 Zone 1	Electric energy in equipment is limited so that circuits cannot ignite an atmosphere by sparking or heating	Measurement and control equipment e.g. sensors, instrumentation
Encapsulation	m	50028	- 18	Category 2 Zone 1	Electric components embedded in approved material to prevent contact with explosive atmosphere	Measurement and control devices, solenoid valves
Type of protection 'n'	nA	50021	- 15	Category 3 Zone 2	Non-arcing and non-sparking	**AC motors**, terminal boxes, light fittings
Note: Group II dust atmospheres are covered by CENELEC EN 50281-1-1 and EN50281-1-2 standards						

Flameproof motors – protection type EExd

In this section, you can read about the construction and the characteristics of a flameproof motor. Likewise, you will find information about the kind of applications flameproof motors are installed in.

Construction of flameproof motors

First of all, flameproof EExd motors are category 2G equipment for use in zone 1. The stator housing and the flanges enclose the flameproof motor parts that can ignite a potentially explosive atmosphere. Because of the enclosure, the motor can withstand the pressure resulting from an explosion of an explosive mixture inside the motor. Propagation of the explosion to the atmosphere that surrounds the enclosure is hereby avoided because the explosion is cooled down by means of flame paths. The size of the flame paths is defined in the EN 50018 standard.

Furthermore, the temperature classification is valid for external surfaces.

Characteristics of flameproof motors

The following features are what characterize a flameproof motor.

- Flame paths
- Reinforced frame, terminal box and end shields
- Greater contact surface between motor components
- Reduced clearance between motor shaft and bearing cap to avoid transmission of sparks to the external environment
- Pressure test of all components (frames, end shields, terminal boxes, and terminal box covers)
- Compulsory third body certification by, e.g. DEMKO, PTB, KEMA or BASEEFA
- Ex approved cable entries

The explosion occurs inside the motor and is lead out of the motor through the flame paths. The temperature classification for flameproof EExd motors is valid for external surfaces

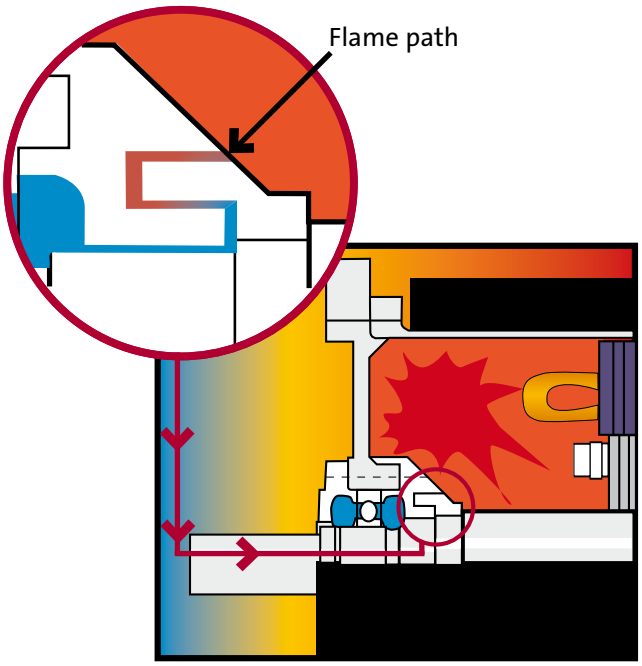

Typical applications for flameproof motors

The most frequent applications for flameproof motors include pumps, fans, blowers, crushers, conveyor systems, mills, cranes and other applications located in areas that require explosion proof motors.

In certain applications the motor may carry two protection types: One for the stator housing, “d” and one for the terminal box, “e”.

In this case, the motor is marked “de”. So, the only difference between a motor that is marked EExde and a motor that is marked EExd is the configuration of the terminals and the terminal box. The terminal box with increased safety terminal block prevents any source of ignition such as sparks and, excessive heating from taking place.

The main characteristics of EExde motors are:

- Terminal box components as well as connection
  cables must be firmly fastened
  (in order not to move)
- Special terminal block to avoid arcs and sparks.
  (increased safety terminal block)
- Double grounding must be provided
  (one on the stator housing and the other on the terminal box cover)

Increased safety motors - protection type EExe

In this section, you can read about the construction and the characteristics of an increased safety motor. Likewise, you will find information about what kind of applictions increased safety motors are installed in.

Construction of increased safety motors

Increased safety motors (type e) are not flameproof and not built to withstand an internal explosion. The construction of such a motor is based on increased security against the risk of excessive temperatures and occurence of sparks and arcs during normal operation, and when one predictable error occurs. The temperature classification for increased safety motors is valid for both internal and external surfaces. Therefore it is important to observe the stator winding's temperature.

Characteristics of increased safety motors

The following features are what characterize an increased safety motor:

- Reduced power output versus frame size.
- Special attention to air gap concentricity and clearance of all rotating parts.
- Components subject to impact tests.
- The temperature rise has to be 10K lower than the permitted maximum for that class of insulation e.g.: ΔT = 70°C for Class B temperature rise.
- PTC (Positive Temperature Coefficient) thermistors 110°C (normal 155°C).
- Maximum surface temperature T1, T2 or T3.
- Compliance with tE characteristic (the time taken at maximum ambient temperature for stator windings to be heated up when carrying the stator current or the locked rotor current.)
- Special terminal board that ensures the speci-fied creepage and clearance, with non-twist terminations.
- Terminal box with IP55 enclosure.
- External grounding on the frame is mandatory.
- Frame grounding must be connected with terminal box grounding.
- Drip cover must be applied on vertical applications.
- Compulsory third body certification by, e.g. DEMKO, PTB, KEMA or BASEEFA.

For increased safety motors EExe,
no sparks may occur. The temperature classification covers both internal and external surfaces

Time t_E

Time t_E is the time it takes for the motor winding, when starting current or locked rotor current runs through it, to reach the temperature limit. The calculation of Time t_E is based on the achieved temperature under normal duty and it takes the maximum ambient temperature into consideration as well.

When the rotor is locked, the motor is switched off by protection device, before time t_E gets to the end.

The supplier is responsible for indicating time t_E on the motor's rating plate and in the data booklet.

The interval OA in the illustration represents the maximum ambient temperature, and the interval OB represents the maximum temperature the stator windings reach under normal operation. If for example the rotor locks and the temperature consequently increases, the protective device turns off the motor. This scenario is illustrated in interval 2 of the chart.

In interval 2, the motor temperature increases quickly and it has to be lower than its maximum surface temperature classification. In order to avoid an explosion, it is therefore important that the motor is put to a stop before it reaches its maximum surface temperature. If you need to know the value tE of an EEx e motor you can find it in the manufacturer's data booklet or on the motor nameplate.

Typical applications for increased safety motors EEx e

In areas, where a certain amount of explosive atmosphere is present, explosions can occur even when the equipment is running normally. The areas are classified as zone 1 and 2, and the equipment as explosion group II. The most common gases that can cause an explosion in these areas include: Ammonia, butane, methane, ether and hydrogen.

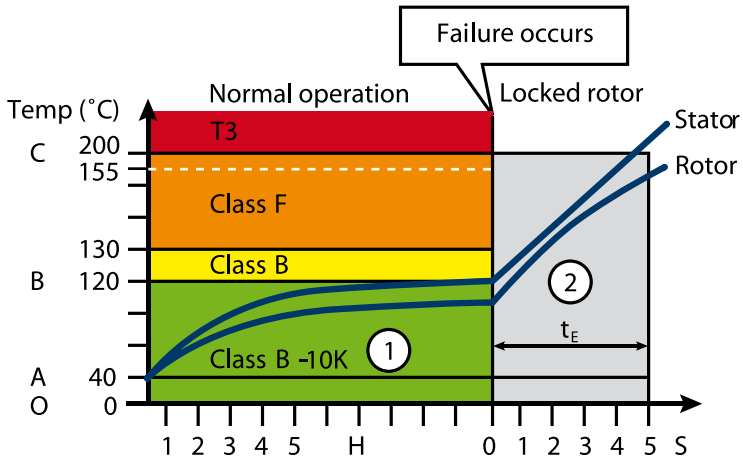

Time t_E is the time it takes the motor winding to reach the maximum temperature. Time t_E is the equivalent to safe stall time or locked rotor time for standard motors

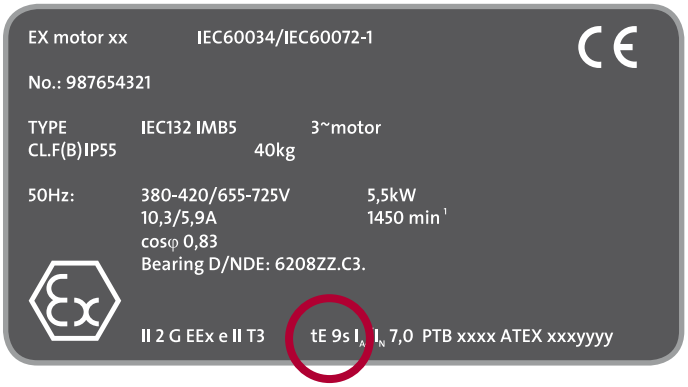

Non-sparking motors - protection type ExnA

In this section, you can read about the construction and the characteristics of non-sparking motors. Likewise,you will find information about what kind of applications non-sparking motors are installed in.

Construction of non-sparking motors

Non-sparking motors type nA cannot by any means ignite a potentially explosive atmosphere, under normal operation. As the name non-sparking implies, the motor is not likely to cause an ignition. Non-sparking motors type ExnA, are category 3G equipment for use in zone 2. The construction of the ExnA motor is more or less similar to the standard IP55 motor.

Characteristics of the non-sparking motor

The following features are what characterize a non-sparking motor:

- Special attention to air gap concentricity and clearance of all rotating parts
- Components subject to impact test
- Permissible internal or external surface temperature classification, T3,T2, T1
- Minimum IP54
- Manufactures can without consulting any authorities declare their motors as ExnA protected motors

Some of the above features are similar to the increased safety motor, type e, except that the standard output is obtained from the motor without any derating and any t_E monotoring. Because these motors are used in areas classified as zone 2, internal and external surfaces are always limited to temperature classification T3,T2, T1, except during start-up.

Typical applications for non-sparking motors

The areas are classified as Zone 2, Non-sparking motors are typically used in environments where an explosive atmosphere will probably not be present under normal operation. The most common gases that can cause an explosion in this area are: Ammonia, butane, methane, ether and hydrogen.

With non-sparking motors, no ignition is likely to occur

Combined equipment

Combined equipment consists of multiple pieces of equipment, components or protective systems that provide a specific function. Combined equipment is used when we deal with an explosive atmosphere. Only when the following three conditions are met, we consider equipment as being combined equipment:

- Composition of pieces of equipment, components and protective systems with the purpose of fulfilling a specific function
- The pieces of equipment cannot be replaced individually
- Combined equipment is placed on the market as a unit

Therefore, motors with variable frequency converters, motor protection devices and other control and surveillance systems are considered as combined equipment.

Motors running in hazardous areas with a converter supply are, depending on the country in which they operate, submitted to various local standards. The operation of the converter must be certified specially and thus, the manufacturer's instructions have to be followed closely.

Therefore, motor, and protective device marked with the type protection code "EEx e" is considered as one single unit and the operating data are determined in the common test certificate issued by for example PTB. Frequency converters are placed away from the zones and are therefore not marked with EEx e. However, the frequency converter type and the special data has to be indicated on the motor certificate. When choosing a frequency converter for an EEx e motor, it is important to follow the motor supplier's instructions as to what type to choose, which manufacturer to choose etc..

The magnitude of the voltage peaks from the converter can have a negative impact on the motor and cause an additional temperature increase.

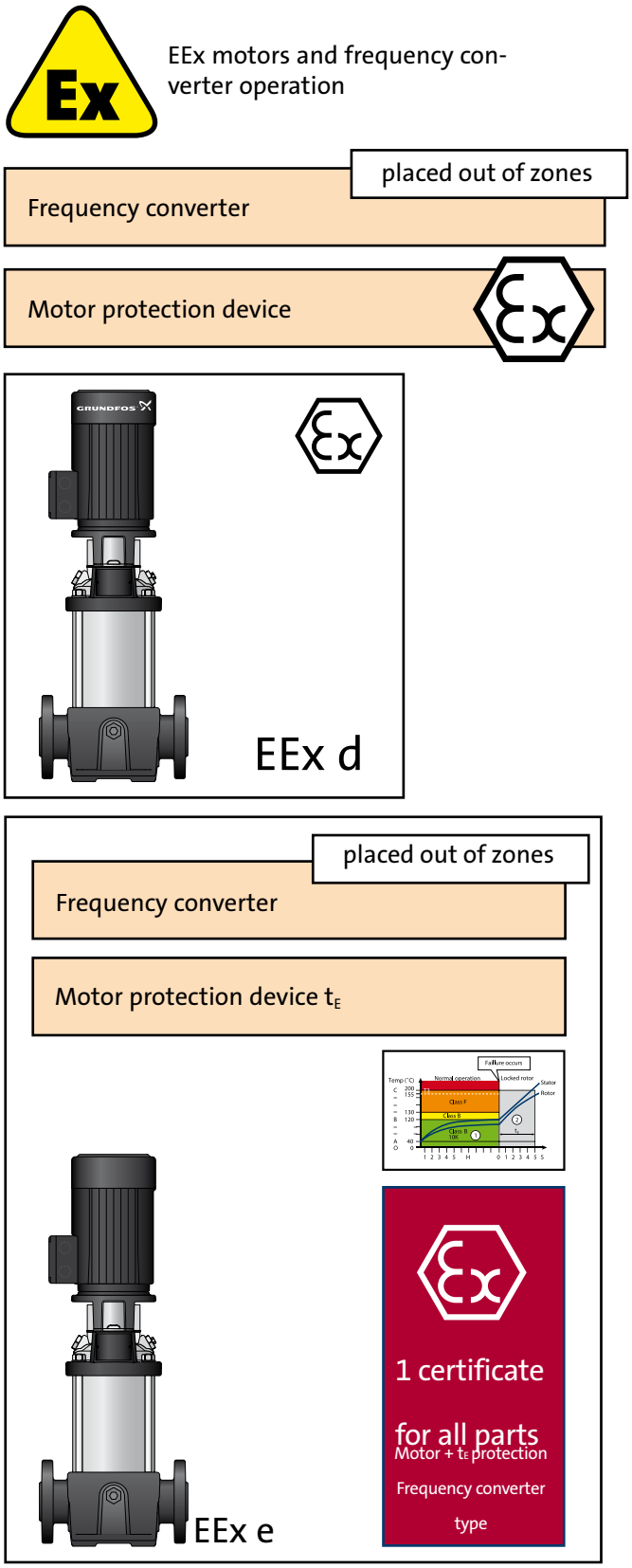

The maximum value of the voltage peaks in a converter, cable and electrical motor system must never exceed the value prescribed by the manufacturer.

If EEx d motors are certified with a protection for the thermal protectors in the winding, all frequency converters can be used without any further approval.

Assemblies and their characteristics

Assemblies are configurations of devices and equipment, which normally consist of multiple pieces of equipment or combined equipment and are mechanically connected to each other by means of tubes or wiring. The following features are what characterise assemblies:

- Single pieces of equipment, generally replaceable and which are subject to conformity assessment separately.

Industrial pumps powered by electric motors are examples of assemblies. Motor and pump are replaced separately within the scope of conformity assessment procedures. They are connected to each other by standard means and are often produced by different manufacturers.
Thus, all Grundfos pumps can be fitted with an approved EX-motor of any type as long as they comply with the Grundfos specific construction demands.

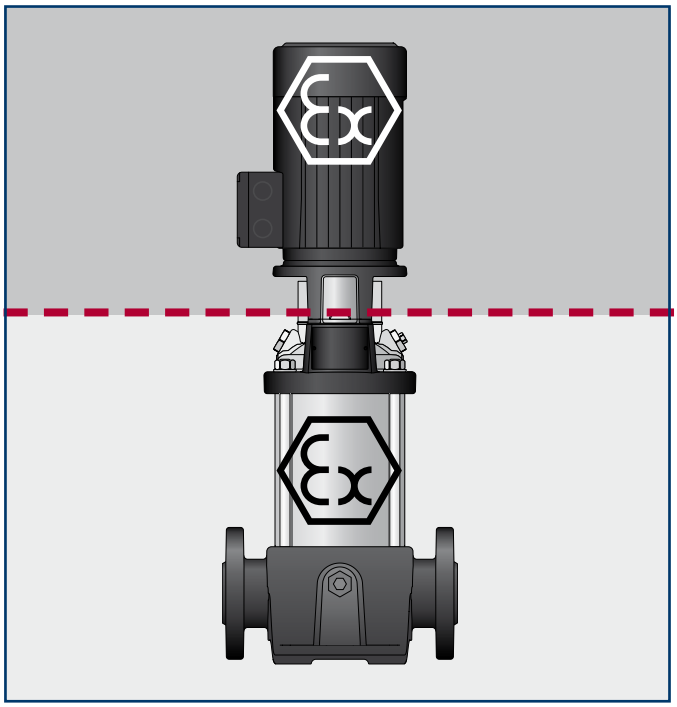

Motor and pump are approved separately in connection with combined equipment.

Therefore motor and pump are perceived as individual assemblies with individual certificates

Installations and electric connections

When it comes to installations and electric connections, national regulations are to be followed. The cable entries have to be approved for explosion-proof areas and they must be protected against self-loosening. Always consult the national edition of the EN 60079-14 standard EN 60079-14 (Installation of Electrical Apparatuses).

Service and maintenance

To ensure that the electric motor always provides maximum protection and delivers a high performance, it is important to carry out regular service and maintenance. However, in most cases only authorised personnel is allowed to carry out service and maintenance. Regulations concerning service and maintenance vary according to the country in which the motor is to operate. Therefore, you have to follow the specific rules that apply for explosion proof motors in your country. Notice that for a wide range of Grundfos pumps, the customer is allowed to repair the separate pump part when the motor has been detached from the complete pump & motor.

On the following page, we have listed some general Danish rules you need to be aware of when you carry out service and maintenance on explosion-proof motors. But again, we need to stress that rules concerning service and maintenance are placed under local legislation and that you need to consult them, to be sure that you take the necessary precautions when you deal with explosion-proof motors.

- Repair of explosion-proof motors has to be carried out by the manufacturer himself. Further, the motor manufacturer has the possibility to assign the repair work to other authorised companies, even across national borders.
- Control and test of repaired motors.
- It is only possible to replace motor parts if it does not affect the motor's protection type or the motor's maximum temperature. If motor parts are replaced, the motor has to be tested before it is put into operation again.
- If it is possible to disconnect the motor during repair, any qualified company can carry out the service as long as it does not affect the explosion protection of the motor.
- When the motor has undergone repair that may have an impact on the motor's protection type, the motor has to go through a new unit control and unit test.

Now that we have presented some general guidelines in connection with repair of explosion-proof motors, it is time to move a step further. What follows are some examples of repair work on original parts, which **does not** affect the motor protection type and thus can be carried out by any qualified company.

- Replacement of damaged cable entries
- Replacement of external fastening equipment such as bolts and screws
- Replacement of thermal relay
- Replacement of bearings and cooling fans
- Welding of cracked motor foot, (if it is not a part of the enclosure)
- Replacement of damaged gaskets

Now that we know what kind of repair work that does not affect the motor's protection type, let us have a look at the type of repair work that **does affect** the motor's protection type, and thus requires authorised personnel:

Whenever it is necessary to carry out repair work that might affect the motor's explosion proofness, an expert has to approve the repair. However, if the expert cannot give his approval of the repair work, the motor must not be reconnected to the pump.

- Drilling of holes in EEx d motor enclosure, flanges, stator housing etc.
- Machining, grinding, painting etc. of flame paths on EEx d motors.
- Replacement of components in EEx d motors by unoriginal components, i.e. self-made flanges.
- Fitting of additional terminals in EEx e terminal box if the terminals are not mentioned in the certificate. Only applies for EEx d motors.
- Rewinding of EEx e motors.
- Replacement of factory-mounted connections between EEx d stator housing and EEx e terminal box by EEx de motors.

Having presented what kind of repair work authorised or qualified personnel may carry out on explosion-proof motors, let us have a look at the type of repair the user is allowed to carry out himself on EExe and EExd motors.

- Repair of external parts, which do not affect the motor's protection type

Should it be necessary to open the motor, you need to follow the local rules in your country. In connection with EExd motors this is especially important because the dismantling and the assembly of the motor might affect the flame paths.

We recommend keeping a log concerning the repair work that has been carried out and the components that have been replaced on each Ex motor.

If there is any doubt about whether the repair work will affect or might affect the protection type of the equipment, the repair always has to be carried out by qualified personnel.

What Grundfos can offer

A wide range of single-stage and multi-stage pumps as well as wastewater pumps are approved as category 2 and 3 equipment and can be used in areas classified as zone 21 and 22 for dust and in 1 and 2 for gas.

Certain types of Grundfos pumps and motors are not approved for operation in hazardous areas. Therefore, Grundfos has a close cooperation with different EX motor manufactures. All of them supply flameproof, increased safety, dust ignition proof and non-sparking motors.

Likewise, the Grundfos motors MGE, MG and MMG and the Grundfos frequency converter CUE are not approved for use in hazardous areas with explosive gases.

What Grundfos can offer

Type of protection	EEx d	EEx de	EEx e	EEx nA
Designation	Explosion-proof	Explosion-proof with increased safety terminal box	Increased safety	Non-sparking
Objective	Avoid internal explosion to propagate to external environment	Explosion not allowed to propagate to the external environment, with special attension to terminal box	Ensure no arcs or sparks during normal operation or starting.	Ensure non-occurrence of arcs or sparks under normal operation
Time t_E	Not applied	Not applied	Applied	Not applied
Construction	Rugged frame	Rugged frame, with special characteristics on the terminal box	Similar to standard motor, with special characteristics on the terminal box and the rotating parts	Similar to standard motor, with special characteristics on the terminal box
Output/ frame ratio	Standard	Standard	Reduced	Standard
Terminal box	Explosion-proof	Explosion-proof with increased safety terminal box	Increased safety terminal box	Increased safety terminal box

This table gives an overview of the different types of Ex motors. Whether you chose one or the other type of motor depends on the code of practice. However, the choice between an EExd and an EExe motor is often determined by tradition and by the type of application in which the motor is to operate.

What Grundfos can offer

KEMA 04TEX2139 X

CE 0344 Ex II 2 G EEx d IIB T4

- T4: Temperature class/ Maximum surface temp.
  T1 = 450˚C T4 = 135˚C
  T2 = 300˚C T5 = 100˚C
  T3 = 200˚C T6 = 85˚C
- IIB: Flameproof symbol/Typical gas
  A = Propane
  B = Ethylene
  C = Hydrogen
- d: Equipment groupings:
  Group I (1): Mine
  Group II (2): Others (A, B, C groups)
- EEx: d - Flameproof to EN 50018
  e - Increased safety to EN 50019
  nA - Non-sparking EN 50021
  de - Flameproof with increased safety terminals EN 50018 & 19
- Ex: Ex - Explosion protection
- II: E - European certification
- 2: G=gas ; D=dust
- G: Category 1: zone 0 or 20
  Category 2: zone 1 or 21
  Category 3: zone 2 or 22
- Equipment groupings:
  Group I (1): Mine
  Group II (2): Others (A, B, C groups)
- The European Commision's mark for equipment in hazardous atmospheres
- 0344: Identification of "Notified body"
  Eg.: 0344 = KEMA; responsible for the certification of the quality system
- CE: Low voltage Directive 73/23/EEC
  EMC Directive 89/336/EEC
  Machinery Directive 98/37/EEC according to EN292
  ATmospères EXplosibles Directive – ATEX – 94/9/EC
- KEMA 04TEX2139 X: Identification of "Notified body" e.g. KEMA, responsible for the type test, and issue of the certification, e.g. 03ATEX2XXX.

Categorisation of Ex motors	
EExe	→ 2G
EExd	→ 2G
ExnA	→ 3G

KEMA 04TEX2139 X

CE 0344 Ex II2D T125°

- T125°: T125˚C = Certified external surface temperature
- D: G=gas ; D=dust
- 2: Category 1: zone 0 or 20
  Category 2: zone 1 or 21
  Category 3: zone 2 or 22
- II: Equipment groupings:
  Group I (1): Mine
  Group II (2): Others (A, B, C groups)
- Ex: The European Commision's mark for equipment in hazardous atmospheres
- 0344: Identification of "Notified body"
  Eg.: 0344 = KEMA; responsible for the certification of the quality system
- CE: Low voltage Directive 73/23/EEC
  EMC Directive 89/336/EEC
  Machinery Directive 98/37/EEC according to EN292
  ATmospères EXplosibles Directive – ATEX – 94/9/EC
- KEMA 04TEX2139 X: Identification of "Notified body" e.g. KEMA, responsible for the type test, and issue of the certification e.g. 03ATEX2XXX.

GRUNDFOS

6. Motor protection

Why is motor protection necessary? 112
What fault conditions are we talking about? 113
Fusible safety switch 114
"Quick-acting" fuses 114
"Time-lag" fuses 115
Fuse clearing time 115
What is a circuit breaker and how does it work? 116
Thermal circuit breakers 116
Magnetic circuit breakers 116
Circuit breaker rating 116
What overload relays do 117
Trip class designation 117
How to combine fuses with overload relays 118
Advanced external motor protection relays 119
Setting of external overload relay 120
Calculation example 120
Internal protection – built into the motor 122
Thermal Protection 122
Thermal switches – built into the terminal box 123
Thermal switch – built into the windings 124
Internal fitting 124
How does a thermal switch function? 125
Connection 125
Thermal protection for the diagram 125
Thermistors – also built into the windings 126
How does a thermistor function? 127
Thermal protection 128
Connection 128
Motors protected against thermal overload with slow variation 128
Motors protected against thermal overload with rapid variation 128
PT100 – temperature sensor 129
What have you learned about motor protection? 129
External protection devices 129
Internal protection devices 129
PTC thermistors 130
PTO thermal switch and thermostats 130
What Grundfos offers? 131

Why is motor protection necessary?

In order to avoid unexpected breakdowns, costly repairs and subsequent losses due to motor down-time, it is important that the motor is fitted with some sort of protective device. Generally speaking, motor protection can be divided into the following 3 levels:

- **External protection against short circuit in the whole installation**. External protection device is normally different types of fuses or short circuit relays. This kind of protection device is compulsory and legal and placed under safety regulations.

- **External protection against overload of specific equipment**; i.e. to avoid overload of pump motor and thereby prevent damage and break-down of the motor. This type of protection reacts on current.

- **Built-in motor protection** with thermal over-load protection to avoid damage and break-down of motor. The built-in protector always require an external circuit breaker while some built-in motor protection types even require an overload relay.

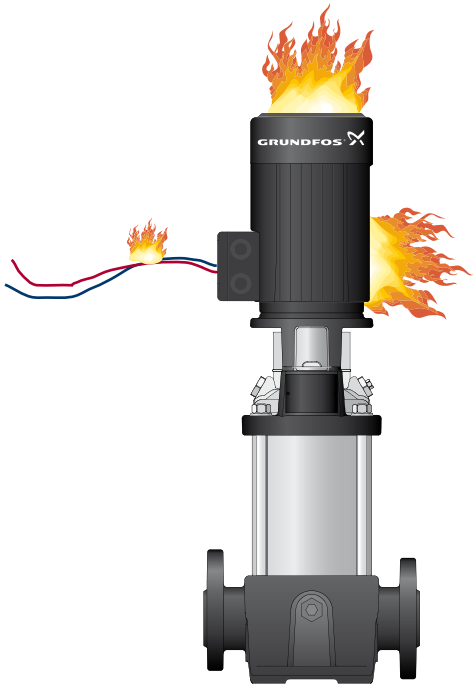

Overload accounts for some 30% of all motor failure
Source: Electrical Research Association USA

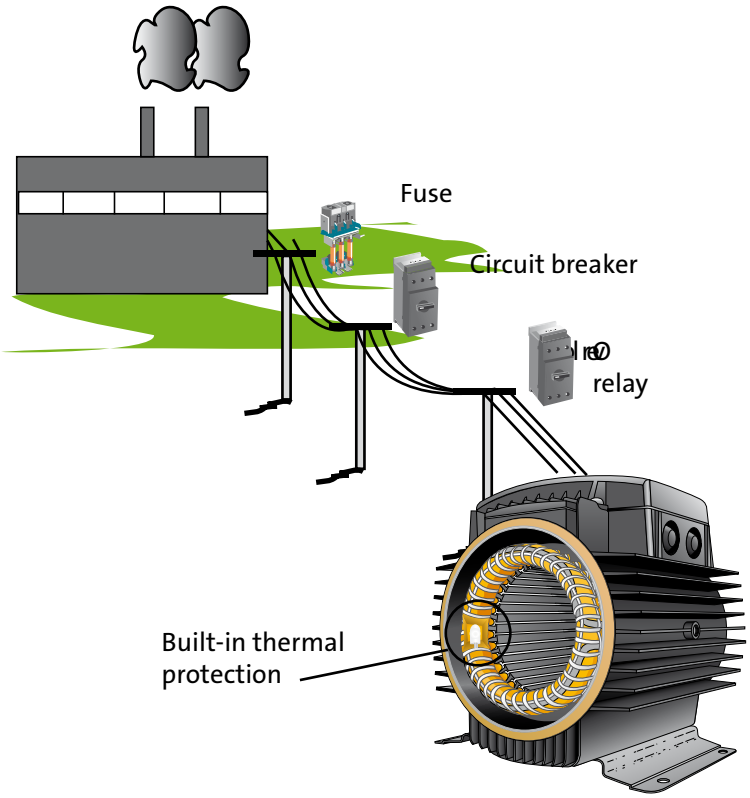

What fault conditions are we talking about?

A wide range of faults can occur different places in the application. Therefore, it is important to anticipate the cause of events, and protect the motor against obstacles in the best possible way. What follows is a list of the most common fault conditions where motor damage can be avoided by some sort of motor protection.

- Problems with the power supply quality:
  - Overvoltage
  - Undervoltage
  - Imbalanced voltages/currents
  - Frequency variation
- Installation, supply & motor failures
- Slowly developing temperature rise:
  - Insufficient cooling
  - High ambient temperature
  - High altitude operation
  - High liquid temperature
  - Too high viscosity of the pumping liquid
  - Frequent starts
  - Too big load inertia (not common for pumps)
- Quickly developing temperature rises:
  - Locked rotor
  - Phase breakage

To protect a circuit against overloads and short circuits, a circuit protective device must determine when one of these fault conditions occurs. It must then automatically disconnect the circuit from the power source. A fuse is the simplest device for accomplishing these two functions. Normally fuses are built together by means of a safety switch, which can switch off the circuit. On the following pages, we will present three types of fuses as to their function and to where they are used: Fusible safety switch, “quick-acting” fuse and “time-lag” fuse.

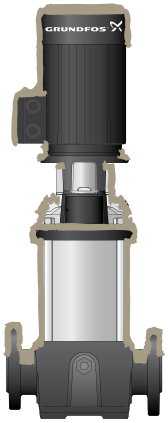

Lack of ventilation due to dirt on the motor

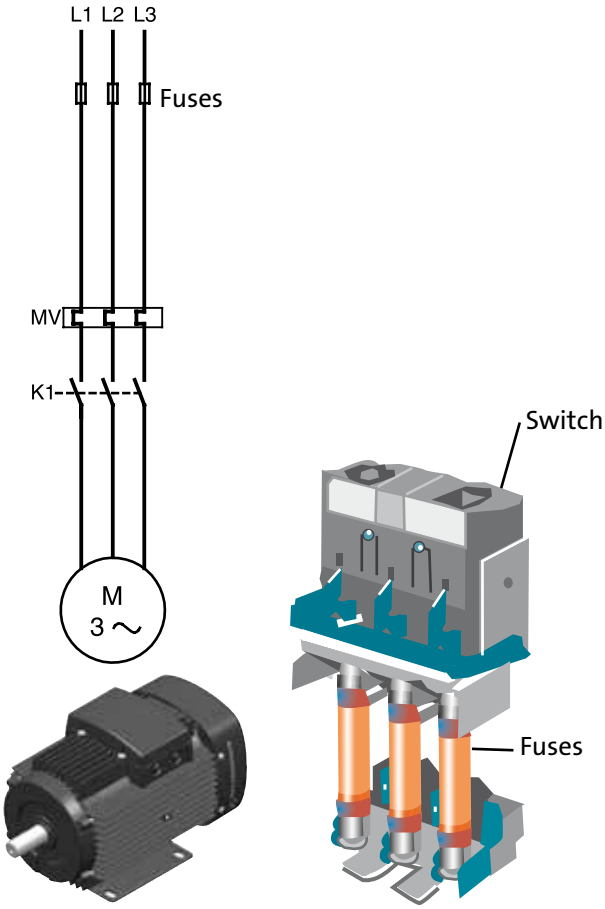

Fusible safety switch

Fusible safety switch

A fusible safety switch is a safety switch, which is combined with a fuse in a single enclosure. The switch manually opens and closes the circuit, while the fuse protect against overcurrent protection.

Switches are generally used in connection with service when it is necessary to cut off the current, or in connection with fault situations.

The safety switch is a switch, which is placed in a separate enclosure. The enclosure protects personnel against accidental exposure to electrical connections and against exposure to weather conditions. Some safety switches come with a built-in function for fuses, and some safety switches come without built-in fuses, containing only a switch.

The overcurrent protection device (fuse) has to recognise the difference between overcurrent and short circuit. Slight overcurrents for example, can be allowed to continue for a short period of time. But as the current magnitude increases, the protection device has to react quickly. It is important to interrupt short circuits immediately.

The fusible disconnect switch is an example of a device which is used for overcurrent protection. Properly sized fuses in the switch open the circuit when an overcurrent condition occurs.

"Quick-acting" fuses

Nontime-delay fuses provide excellent short circuit protection. However, brief overloads, such as motor starting currents, may cause problems for this kind of fuse. Therefore, nontime-delay fuses are best used in circuits, which are not subject to large transient currents. Normally, nontime-delay fuses hold some 500% of their rated current for one-fourth of a second. After this time, the current-carrying element melts, and opens the fuse. Thus, in motor circuits, where the starting current often exceeds 500% of the fuse's rated current, nontime-delay fuses are not recommended.

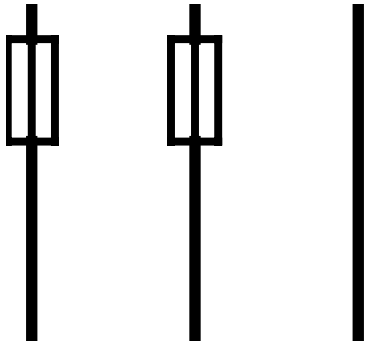

Fuses are typically represented by these symbols in electrical circuit diagrams

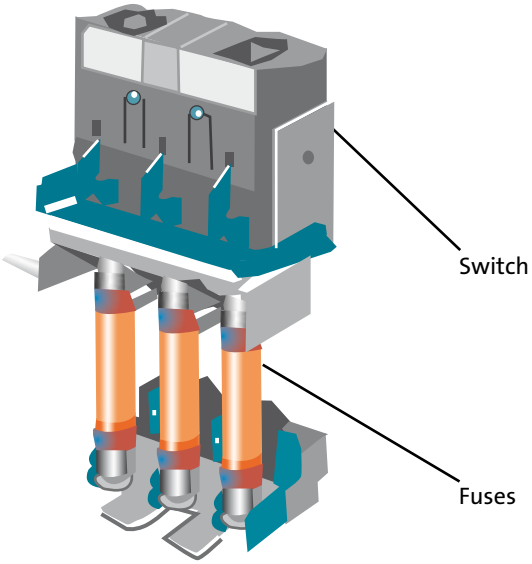

Fusible safety switch

"Time-lag" fuses

This kind of fuse provides both overload and short-circuit protection. Typically, they allow up to 5 times the rated current for up to 10 seconds and for shorter periods even higher currents. Usually, this is sufficient to allow a motor to start without opening the fuse. On the other hand, if an overload condition occurs and persists for a longer period of time, the fuse will eventually open.

Fuse clearing time

The fuse clearing time is the response time it takes the fuse to open. Fuses have an inverse time characteristic, meaning that the greater the overcurrent, the shorter the clearing time.

Generally speaking, pump motors have a very short run-up time; below 1 second. So, blown fuses during start-up are normally not an issue for pumps if the fuses match the motor's full-load currentand is a time-lag fuse.

The illustration on your right-hand side shows the principle of a tripping curve for a fuse. The x-axis shows the relation between the actual current and the full-load current: If the motor consumes the full-load current or less, the fuse does not trip. But at 10 times the full-load current, the fuse will trip in a very short time (0.01 s). The Y-axis shows the clearing time.

During start-up, an induction motor consumes a large amount of current. In some rare cases, this may lead to a cut-out via relays or fuses. Different methods of starting the motor exist in order to reduce the locked rotor current.

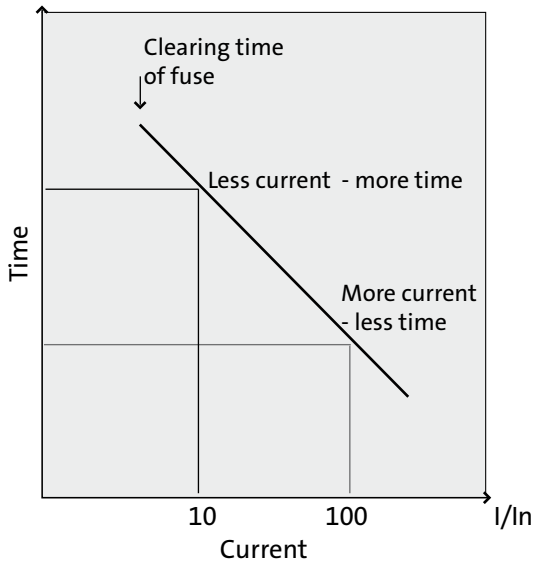

Principle of a tripping curve for a fuse.
The graph shows the relation between the actual current and the full-load current

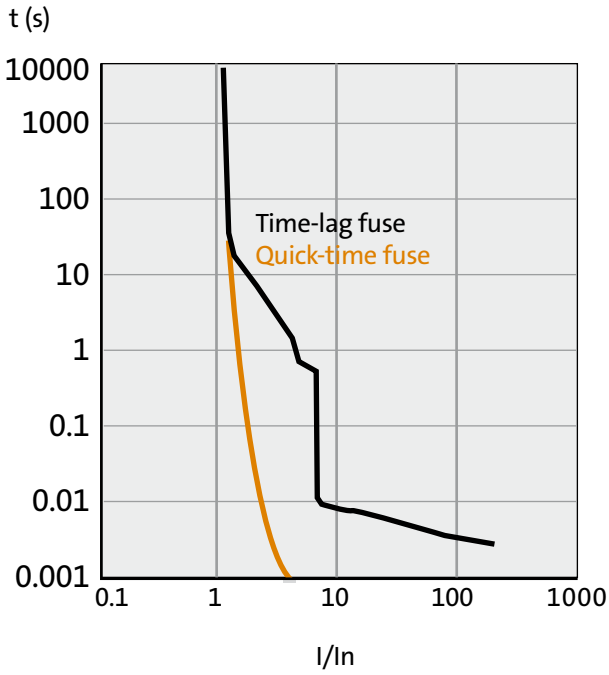

Tripping curve for a "quick-acting" and a "time-lag" fuse.
The "time-lag" fuse is the best choice for motors because of the high starting current

What is a circuit breaker and how does it work?

A circuit breaker is an overcurrent protection device. It opens and closes a circuit automatically at a predetermined overcurrent. When the circuit breaker is applied correctly within its rating, opening and closing the circuit breaker does not damage it.

It is easy to reactivate the circuit breaker immediately after a overload has occurred. The circuit breaker is simply reset after the fault is corrected.

We distinguish between two kinds of circuit breakers: Thermal and magnetic circuit breakers.

Thermal circuit breakers

Thermal circuit breakers are the most reliable and cost-effective type of protection device that exists and are well-suited for motors. They can withstand high-level current waves, which arise from motor starts and they protect the motor against failure e.g. locked rotor.

Magnetic circuit breakers

Magnetic circuit breakers are precise, reliable and cost-effective. The magnetic circuit breaker is stable temperature-wise, meaning that it is rarely affected by changes in the ambient temperature. Compared to thermal circuit breakers, magnetic circuit breakers offer a more precise trip time. The illustration on your right-hand side shows the characteristics of the two types of circuit breakers.

Circuit breaker rating

Circuit breakers are rated according to the level of fault current they interrupt. So, when you select a circuit breaker, always choose one that can sustain the largest potential short-circuit current, which is likely to occur in the application.

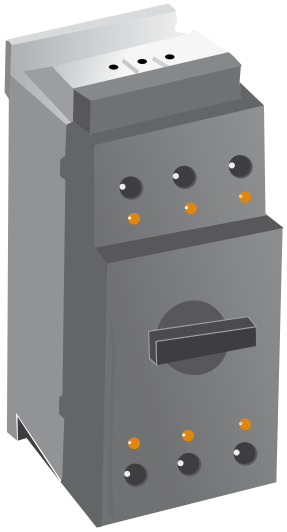

A circuit breaker is an overcurrent protection device. It opens and closes a circuit automatically on a predetermined overcurrent. Subsequently, the circuit closes automatically or manually

Characteristics of thermal and magnetic circuit breakers

Thermal	Magnetic
Temperature sensitive	Not temperature sensitive
Not voltage sensitive	Voltage sensitive
Fixed time delay	Various time delays
Push-to-reset and switch function	Switch function
Limited circuit functions	Variety of circuit functions
Small package size	Larger package size
Lower cost	Higher cost

What overload relays do

Overload relays:

- Make it possible for the motor to handle harmless temporary overloads without interrupting the circuit, i.e. motor starting.
- Trip and open a motor circuit, if the current exceeds its limits and might damage the motor.
- Are reset either automatically or manually once the overload situation has passed.

IEC and NEMA are responsible for setting the standards as to trip classes and thus for overload relays.

Trip class designation

Generally, overload relays react to overload relay conditions according to the trip curve. Regardless of the product style (NEMA or IEC), trip classes specify the periode of time it takes the relay to open when overload occurs. The most common classes are 10, 20 and 30. The figure refers to the periode of time it takes the relay to trip. A class 10 overload relay trips within 10 seconds or less at 600% of full-load current, a class 20 overload relay trips within 20 seconds or less and a class 30 overload relay trips within 30 seconds or less.

The degree of inclination of the trip curve depends on the motor's protection class. IEC motors are typically adapted to the application in which they are designed to operate. This implies that the overload relay is able to handle excess amounts of current, very close to its maximum capacity. The trip time is the time it takes for a relay to trip during overload. The trip time is divided into different classes. The most common trip classes are 10, 20 and 30. Trip class 10 is the most common one for IEC motors because they are often adapted to the application. NEMA motors are applied with more built-in excess capacity, and therefore, the trip class 20 is most common.

Trip class 10 relays shut off the motor within 10 seconds at 600% of full-load current. Trip class 10 is normally used for pump motors because the run-up time of the motor is around 0.1 – 1 second. Many high inertia industrial loads require more time to start. Many of these loads require trip class 20.

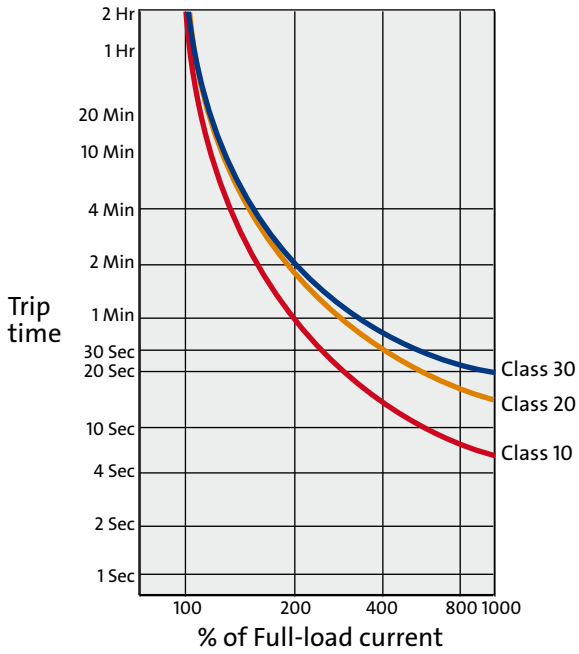

The trip time is the time it takes for a relay to trip during overload. The trip time is divided into different classes

How to combine fuses with overload relays

Fuses prevent short circuits from damaging the installation and in worst case causing a fire, and must therefore have adequate capacities. The lower currents are cleared by the overload relay. Here, the rated current of the fuse does not correspond to the motor rating but to the current, which is likely to damage the weakest components in the installation. As mentioned previously, the fuse provides short circuit protection and **does not** provide low overcurrent protection.

The illustration on your right-hand side shows the most important parameters that form the basis for a successful co-ordination of fuses and overload relays.

It is essential that the fuse trips out before thermal damage of other parts of the installation occur because of short-circuit.

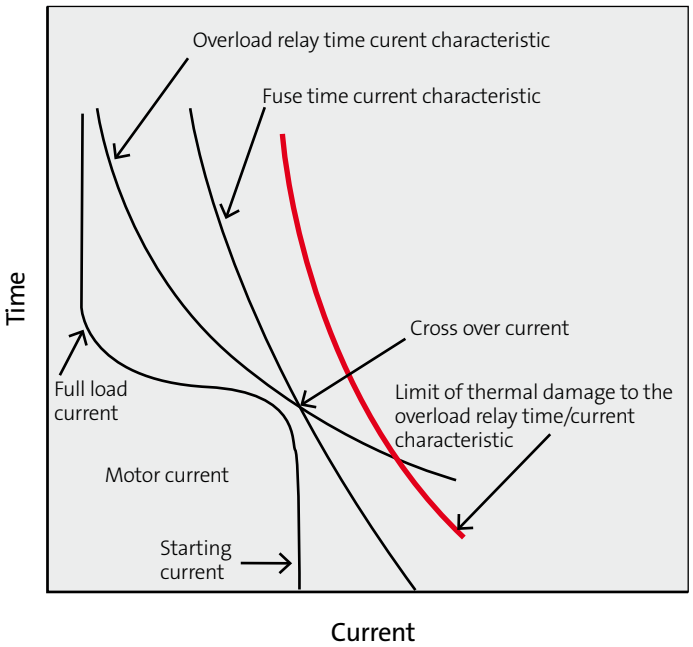

The most important parameters that form the basis for a successful co-ordination of fuses and overload relays. The fuse time current curve always has to be situated lower than the limit curve (red curve) for thermal damage

Advanced external motor protection relays

More advanced external motor protection systems can also protect against overvoltage, phase imbalance, too many starts/stops, vibrations, PT100 temperature monitoring of stator and bearings, insulation resistance and monitor ambient temperature. Further, advanced external motor protection systems are able to handle the signal from built-in thermal protection. Thermal protection device will be covered later on in this chapter.

These external motor protection relays are designed to protect three-phase motors against conditions, which can damage them in the short or the long run. In addition to motor protection, the external protection relay has features that can protect the motor in different situations:

- Give an alarm before damage results from a process malfunction
- Diagnose problems after a fault
- Allow verification of correct relay operation during routine maintenance
- Monitor bearings for temperature and vibration

It is possible to connect overload relays throughout an entire plant to a central control system and constantly monitor and make a fast fault diagnose. When an external protection relay in an overload relay is installed, the downtime decreases due to process problems. The explanation is that it is possible to detect the fault quickly and avoid that it causes any damages to the motor.
For instance, the motor can be protected against:

- Overload
- Locked rotor
- Stall / mechanical jam
- Repeated starts
- Open phase
- Ground fault
- Overtemperature (using PT100 or thermistors signal from the motor)
- Undercurrent
- Overload warning

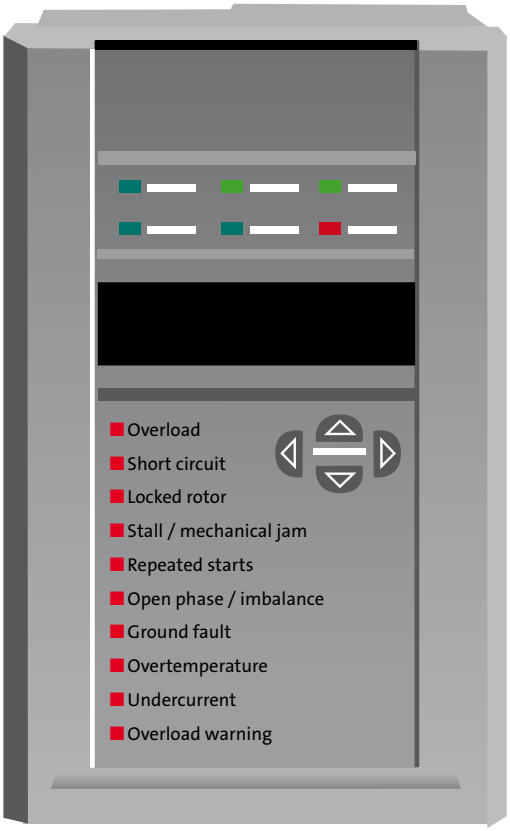

Advanced motor protection relay

Advanced external motor protection relays

Setting of external overload relay

The full-load current at a given voltage indicated on the nameplate is normative for setting the overload relay. Because of the variable voltages around the world, motors for pumps are made to be used at both 50 Hz and 60 Hz in a wide voltage range. Therefore, a current range is indicated on the motor's nameplate. The exact current capacity can be calculated when we know the voltage.

Calculation example

When we know the precise voltage for the installation, the full-load current can be calculated at 254 Δ/440 Y V, 60 Hz.

The data is indicated on the nameplate as shown on the illustration on your right-hand side.

f = 60 Hz

U = 220-277 Δ/380 - 480 Y V

I n = 69,5-56,5/40,0-32,5 A

60 Hz data calculation

U_a = 254 Δ/440 Y V (actual voltage)

U_{min} = 220 Δ/380 Y V (Minimum values in the voltage range)

U_{max} = 277 Δ/480 Y V (Maximum values in the voltage range)

The voltage ratio is determined by the following equations:

$$U\Delta = \frac{U_a - U_{min}}{U_{max} - U_{min}}$$

in this case $\frac{254 - 220}{277 - 220} = 0.6$

$$UY = \frac{U_a - U_{min}}{U_{max} - U_{min}}$$

in this case $\frac{440 - 380}{480 - 380} = 0.6$

$$U\Delta = UY = 0.6$$

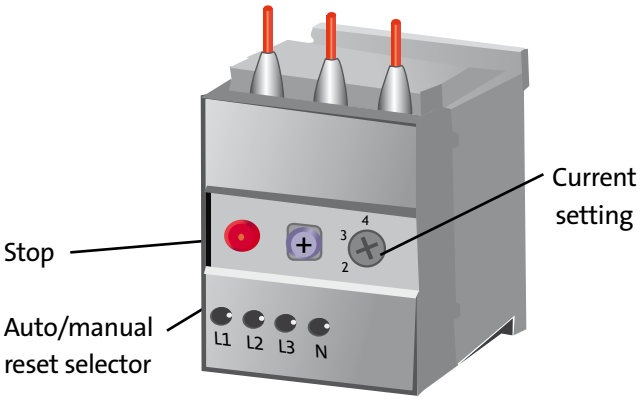

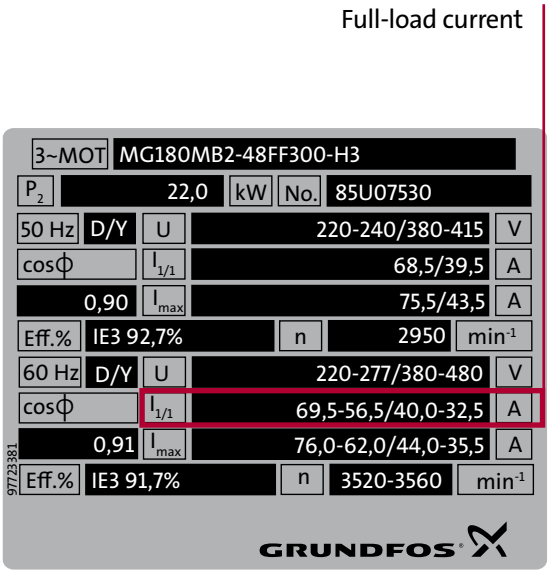

The full-load current at a given voltage indicated on the nameplate is normative for setting the overload relay

Calculation of the actual full-load current (I):

I_{min} = 69,5/40,0 A
(Current values for Delta and Star at minimum voltages)

I_{max} = 56,5/32,5 A
(Current values for Delta and Star at maximum voltages)

Now, it is possible to calculate the full-load current by means of the first formula:

I for Delta values:
69,5 + (56.5 - 69.5) • 0.6 = 61.7 A

I for Star values:
40.0 + (32.5 - 40.0) • 0.6 = 44.5 A

The values for the full-load current correspond to the permissible full-load current of the motor at 254 Δ/440 Y V, 60 Hz.

Rule-of-thumb: The external motor overload relay is always set to the nominal current shown on the nameplate.

However if motors are designed with a service factor, which is then shown on the nameplate eg. 1.15, the set current for the overload relay can be raised by 15% compared to full-load current or to the service factor amps, (SFA) which is normally indicated on the nameplate.

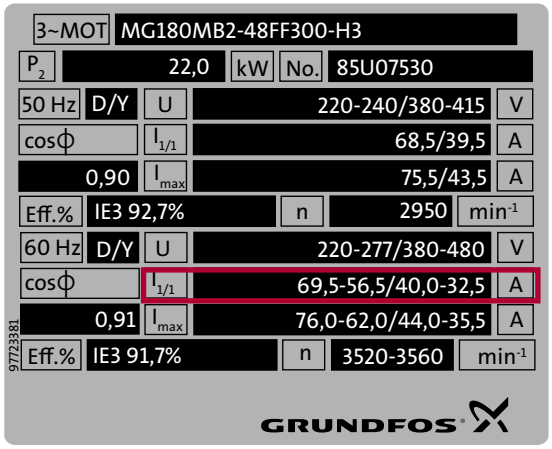

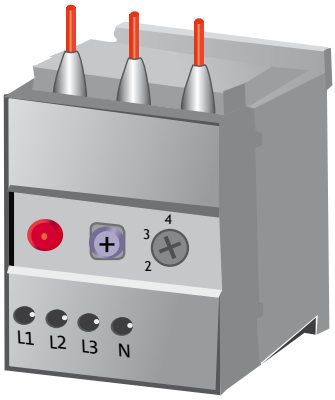

If the motor is connected in star = 440 V 60 Hz the overload relay then has to be set to 44.5 A

Internal protection - built into the motor

Why have built-in motor protection, when the motor is already fitted with overload relays and fuses? Sometimes the overload relay does not register a motor overload. Here are a couple exampels of this:

- If the motor is covered and is slowly warmed up to a high damaging temperature.
- In general, high ambient temperature.
- If the external motor protection is set at a too high trip current or is installed in a wrong way.
- If a motor, within a short period of time, is restarted several times, the locked rotor current warms up the motor and eventually damages it.

The degree of protection that an internal protection device provides is classified in the IEC 60034-11 standard.

Thermal Protection

IEC 60034-11 specifies protection against thermal overload with slow variation or with rapid variation.

Grundfos single-phase motors that are supplied with built-in thermal protection are protected against both constant overload and stalled condition. The device is automatically reset.

Built-in thermal protection for three-phase Grundfos motors can either be PTO or PTC.

PTC: Protection against slow and rapid overload (i.e. constant overload and stalled condition).

PTO: Protection against slow overload (i.e. constant overload).

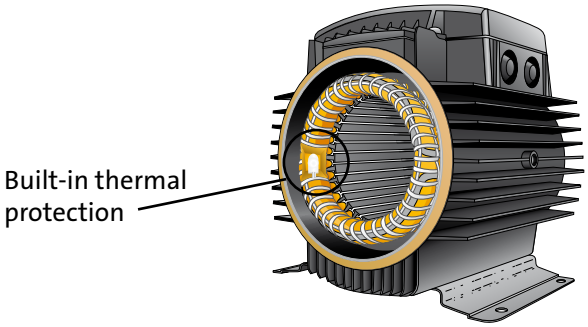

Internal protection built into windings

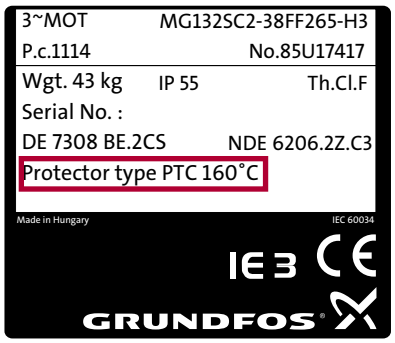

PTC protection in a MG 5.50 kW motor

Internal protection - built into the motor

3-phase MG Grundfos motors as from 3.0 kW have PTC as standard. These motors have been tested to verify the protection against thermal overload with slow and rapid variation.

Information about which type of protection has been applied to a motor can be found on the nameplate and in the Product Information for the motor.

In general, internal protection can be implemented using two types of protectors: **Thermal switches** or **thermistors.**

Thermal switches - built into the terminal box

Thermal protectors or thermostats use a snap-action, bi-metallic, disc type switch to open or to close the circuit when it reaches a certain temperature. Thermal protectors are also referred to as Klixons, (trade name from Texas Instruments).

When the bi-metal disc reaches a predetermined temperature, it opens or closes a set of contacts in an energized control circuit. Thermostats are available with contacts for normally open or normally closed operation, but the same device cannot be used for both. Thermostats are pre-calibrated by the manufacturer and cannot be adjusted. The discs are hermetically sealed and are placed on the terminal board.

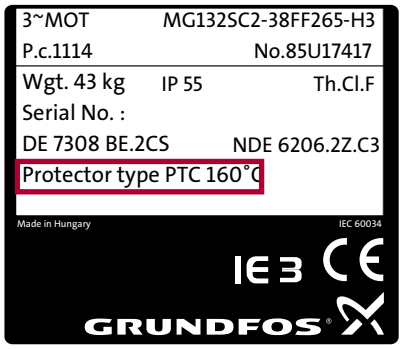

PTC protection in a MG 5.50 kW motor

Thermal switch without heater

Thermal switch with heater

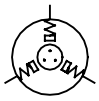

Thermal switch without heater for three-phase motors (star-point protector)

Internal protection - built into the motor

A thermostat can either energize an alarm circuit, if normally open, or de-energize the motor contactor, if normally closed and in series with the contactor. Since thermostats are located on the outer surface of the coil ends, they sense the temperature at that location. In connection with three-phase motors, thermostats are considered unstable protection against stall or other rapidly changing temperature conditions. In single phase motors thermostats do protect against locked-rotor conditions.

Thermal switch - built into the windings

Thermal protectors can also be built into the windings, see the illustration on your right-hand side.

They operate as a sensitive power cut-out for both single and three-phase motors. In single-phase motors, up to a given motor size around 1.1 kW it can be mounted directly in the main circuit to serve as an on-winding protector.

Klixon and Thermik are examples of thermal switch These devices are also called PTO (Protection Thermique à Ouverture).

Internal fitting

In single-phase motors one single thermal switch is used. In three-phase motors 2 thermal switches connected in series are placed between the phases of the motor. In that way all three phases are in contact with a thermal switch. Thermal switches can be retrofitted on the coil end, but the result is an increased reaction time. The switches have to be connected to an external monitoring system. In that way the motor is protected against a slow overload. The thermal switches do not require an amplifier relay.

Thermal switches CANNOT protect against locked-rotor conditions.

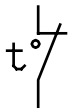

Thermal protection to be connected in series with the winding or to a control circuit in the motor

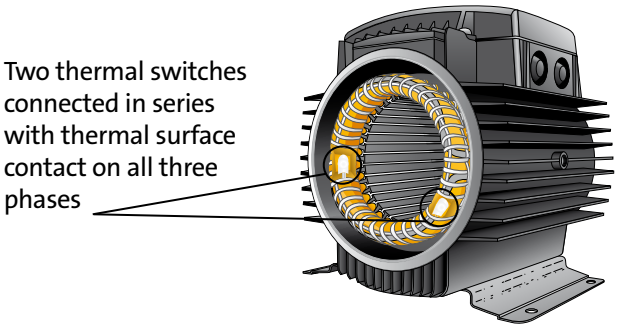

Thermal protection built into the windings

Klixons

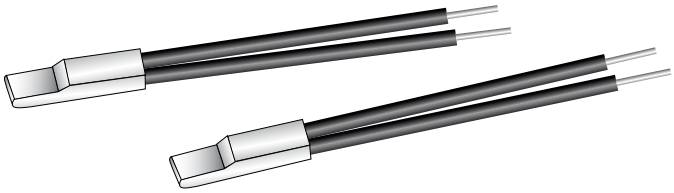

Thermik - PTO

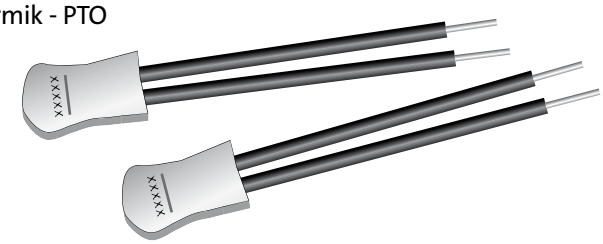

Current and temperature sensitive thermal switches

How does a thermal switch function?

The curve on your right-hand side shows the resistance as a function of the temperature for a typical thermal switch. Depending on the thermal switch manufacturer, the curve changes. T_N is typically around 150 - 160°C.

Connection

Connection of a three-phase motor with built-in thermal switch and overload relay.

Thermal protection for the diagram

Protection according to the IEC 60034-11 standard against thermal overload with slow variation. In order to handle a locked-rotor, the motor has to be fitted with an overload relay.

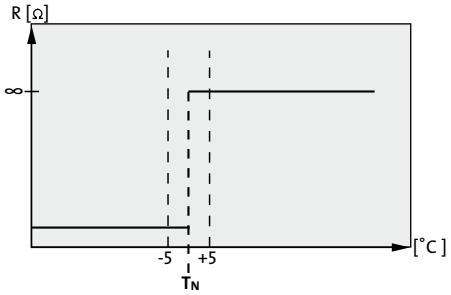

Resistance as a function of the temperature for a typical thermal switch

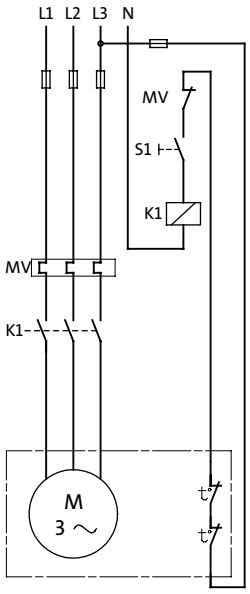

Automatic reclosing

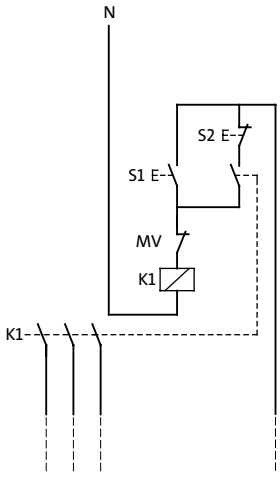

Manual reclosing

S1	On/off switch
S2	Off switch
K1	Contactor
t	Thermal switch in motor
M	Motor
MV	Overload relay

Thermal switches can be loaded as followed:

U_{max}= 250 V AC

IN = 1.5 A

Imax = 5.0 A (cut-in and cut-out current)

How does a thermal switch function?

Thermistors
- also built into the windings

The second type of internal protection is the thermistors or Positive Temperature Coefficient sensors (PTC). The thermistors are built into the motor windings and protect the motor against locked-rotor conditions, continuous overload and high ambient temperature. Thermal protection is then achieved by monitoring the temperature of the motor windings with PTC sensors. If the windings exceed the rated trip temperature, the sensor undergoes a rapid change in resistance relative to the change in temperature.

As a result of this change, the internal relays de-energize the control coil of the external line break contactor. As the motor cools and an acceptable motor winding temperature has been restored, the sensor resistance decreases to the reset level. At this point, the module resets itself automatically, unless it was set up for manual reset.

When the thermistors are retrofitted on the coil ends, the thermistors can only be classified as a protection against thermal overload with slow variation according to IEC 60034-11. The reason is that the thermistors do not have complete contact with the coil ends, and therefore, it cannot react as quickly as it would if they were fitted into the winding originally.

The thermistor temperature sensing system consists of positive temperature coefficient sensors (PTC) embedded in series of three - one between each phase - and a matched solid-state electronic switch in an enclosed control module. A set of sensors consists of three sensors, one per phase. The resistance in the sensor remains relatively low and constant over a wide temperature band and increases abruptly at a pre-determined temperature or trip point. When this occurs, the sensor acts as a solid-state thermal switch and de-energizes a pilot relay. The relay opens the machine's control circuit to shut down the protected equipment. When the winding temperature returns to a safe value, the module permits manual reset.

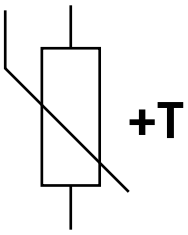

Thermistor / PTC. Only temperature sensitive. The thermistor has to be connected to a control circuit, which can convert the resistance signal, which again has to disconnect the motor.
Used in three-phase motors.

PTC sensors

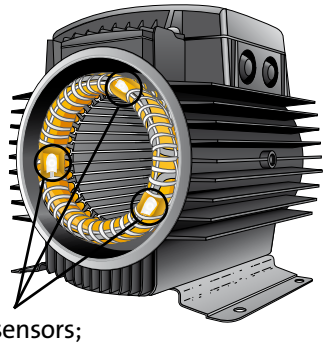

3 PTC sensors;
one in each phase

PTC protection built into windings

Nominal response temperature T_{NF} [C°]	145	150	155	160	165	170
Colouring leads	white	black	blue	blue	blue	white
	black	black	black	red	brown	green

The colours on the PTC leads help determine what trip temperature the PTC sensor is made to handle. This specific PTC sensor has a T_{NF} at 160°C. PTC sensors come with trip temperatures ranging form 90°C to 180°C with an interval of 5 degrees

Thermistors are standard in all Grundfos motors from 3 kW and up.
The positive temperature coefficient (PTC) thermistor system is considered fail-safe since a broken sensor or sensor lead results in an infinite resistance and develop a response identical to that of elevated temperature, de-energizing the pilot relay.

How does a thermistor function?

The critical values of the resistance / temperature characteristic for motor-protection sensors are defined by the DIN 44081/DIN 44082 standards.

The DIN curve on your right shows the resistance in the thermistor sensor as a function of temperature.

The thermistor has the following advantages compared to the PTO:

- Reacts faster because of lower volume and mass
- Better contact with the winding
- Sensors on each phase
- Provide protection against locked-rotor conditions

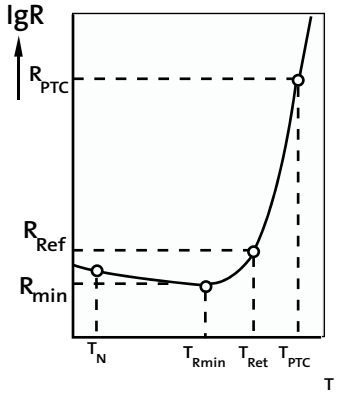

Typical resistance versus temperature characteristic of a PTC thermistor (DIN 44081/44082)

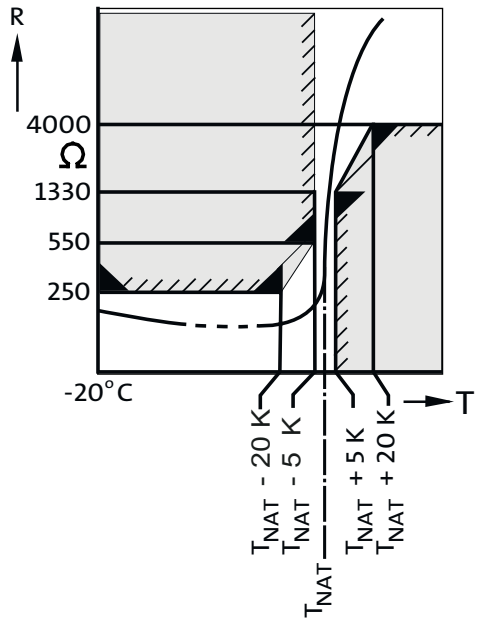

Critical limits in the resistance temperature characteristic for motor protection sensors.

T_{NAT} = tripping temperature for the thermistor

The curves covers one thermistor unit.
Values must be trippled to cover the motor PTC thermistors

Thermal Protection

The motor protection against thermal overload with slow and rapid variation can only be achieved when PTC thermistors are entirely incorporated in the coil end. Protection against thermal overload with slow variation is only achieved in connection with retrofitting. The motor must be tested and verified by the manufacturer to ensure the protection against thermal overload with rapid or slow variation. Motors with protection against thermal overload with slow variation has to be fitted with an overload relay in order to handle blocking.

Connection

The figures on your right hand side show a connection of a three-phase motor with PTC thermistors and Siemens tripping unit. In order to obtain protection against both slow and rapid overload, we recommend the following type of connection for motors with PTC sensors.

Motors protected against thermal overload with slow variation

Motors only protected against thermal overload with slow variation must be connected to an overload relay. the motor against rapid overload, the motor has to have a motor overload realy. The overload relay has to be connected to the PTC relay in series.

Motors protected against thermal overload with rapid variation

The motor protection against thermal overload with rapid variation can only be achieved when the PTC thermistors is entirely incorporated in the coil end. Protection against thermal overload with slow variation is achieved in connection with retrofitting.

The thermistors are designed in accordance with the DIN 44082 standard, and can handle a load U_{max} of 2.5 VDC. All tripping units are designed to receive signals from DIN 44082 thermistors, i.e. thermistors from Siemens.

Please note: It is important that the built-in PTC device is connected to the overload relay in series. Reclosing of an overload relay over and over again, can lead to winding burnout, if the motor is blocked or starts with high inertia. Therefore, it is important to ensure that both the PTC device and the overload relay indicate that the temperature and the consumption of current is normal. This is done by connecting the two devices in series.

Motor protection against thermal overload with slow variation

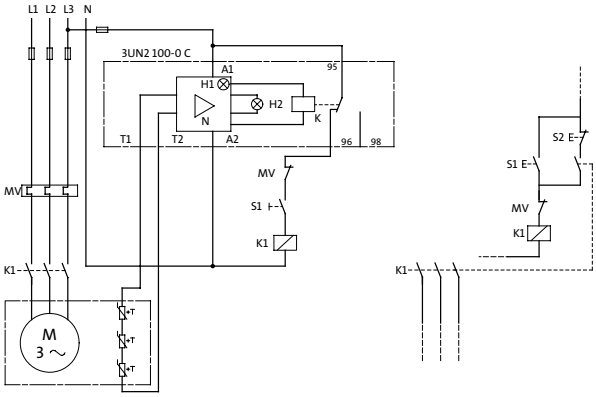

Automatic reclosing Manual reclosing

Motor protection against thermal overload with rapid variation

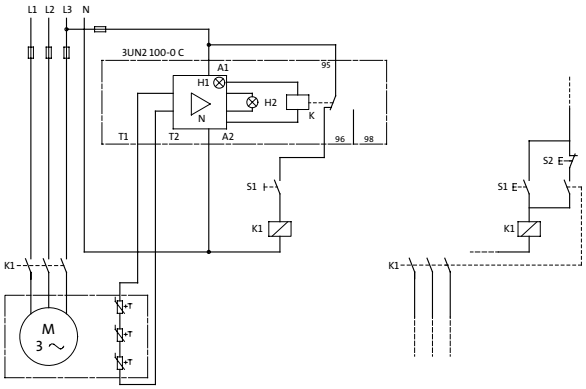

Automatic reclosing Manual reclosing

S1	On/off switch
K1	Contactor
t	Thermistor in motor
M	Motor
MV	Motor overload relay

3UN2 100-0C tripping unit with automatic reclosing:

A	Amplifying relay
C	Output relay
H1	LED “Ready”
H2	LED “Tripped”
A1, A2	Connection for control voltage
T1, T2	Connection for thermistor circuit

PT100 – temperature sensor

The PT100 is a protection device. The PT100 varies its resistance continuously and increasingly as the temperature changes. A signal from a PT100 temperature sensor can be used for feedback control by a microprocessor to determine the exact winding temperature. This can also be used to monitor bearing temperatures.

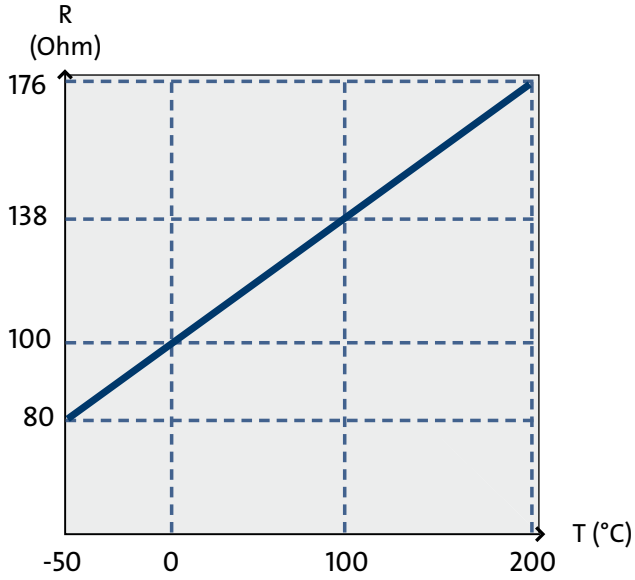

PT100 – temperature sensor

What have you learned about motor protection?

There are several methods to protect an electric motor from overheating. What follows is a summary of the most important devices and their characteristics.

External protection devices

External protection devices such as fuses, circuit breakers and thermal and current overload relays, react on the current drawn by the motor. External protection device is set to shut the motor down if the current exceeds the nominal full load. Therefore, the motor may overheat without registering a problem, e.g. if the fan cover inlet gets blocked by a plastic bag or by an excessively high ambient temperature, the current will not increase, but the temperature will. External protection devices protect against a locked-rotor situation.

Internal protection devices

Internal protection devices such as thermistors, are much more effective than external protection devices. The reason is that internal protection device actually measures the winding temperature. The two most common internal protection devices are PTC - thermistors and PTO - thermal switches.

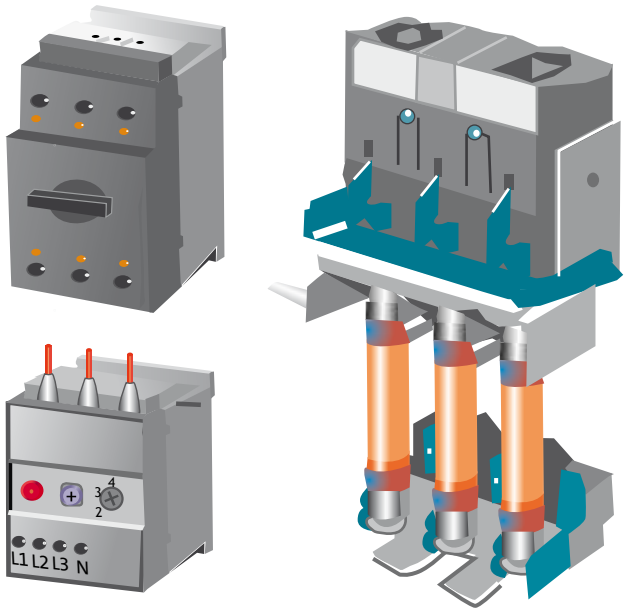

External motor protection

What have you learned about motor protection?

PTC thermistors

PTC thermistors, (Positive Temperature Coeffi-cient thermistors) can be fitted into the windings of a motor during production or retrofitted afterwards. Usually three PTC thermistors are fitted in series; one in each phase of the winding. They can be purchased with trip temperatures ranging from 90°C to 180°C in 5° steps. PTC thermistors have to be connected to a thermistor relay, which detects the rapid increase in resistance of the thermistor when it reaches its trip temperature. These devices are non-linear. At ambient temperatures the resistance of a set of three will be about 200 ohms, and this will increase rapidly to 3000 ohms, (1000 ohms each). If the temperature increases any further, the PTC thermistor can reach several thousand ohms. The thermistor relays are usually set to trip at 3000 ohms or are preset to trip according to what the DIN 44082 standard prescribes.

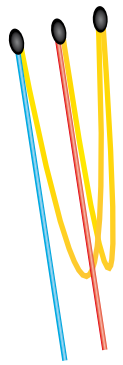

PTC sensors

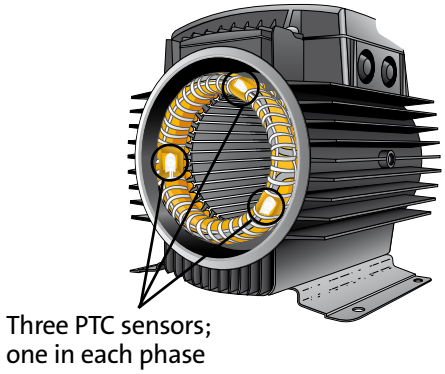

PTC protection built into windings

PTO thermal switch and thermostats

Thermal switches are small bimetallic switches that switch due to the temperature. They are available with a wide range of trip temperatures; normally open and closed types. The most common type is the closed one, one or two, in series, are usually fitted in the windings like thermistors and can be connected directly to the circuit of the main contactor coil. In that way no relay is necessary. This type of protection is cheaper than thermistors, but on the other hand, it is less sensitive and is not able to detect a locked rotor failure.

Klixons

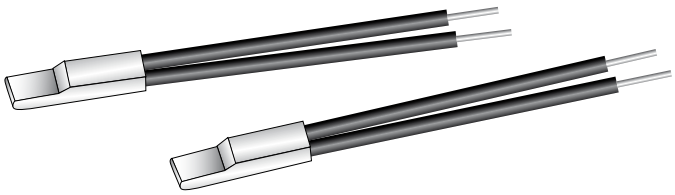

Thermik - PTO

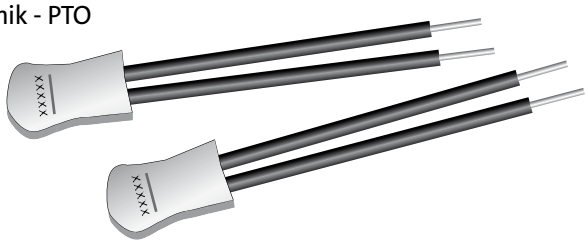

Current and temperature sensitive thermal switches

What Grundfos offers?

All Grundfos' single-phase motors and all three-phase motors above 3 kW come with built-in thermal protection. Motors with PTC sensors come with three PTC sensors, one in each phase. This is mainly for protection against slowly rising temperatures in the motor, but also for protection against rapidly rising temperatures. Depending on the motor construction and its application, the thermal protection may also serve other purposes or prevent harmful temperatures in the controllers, which are placed on the motors.

Therefore, if the pump motor has to be protected against any conceivable situation, the motor has to be fitted with both an overload relay and a PTC device if the motor is not protected against thermal overload with slow and rapid variation. An overload relay and the PTC have to be connected in series, so that the motor does not restart before the both devices are ready. In this way the motor is not overloaded or too warm.

Grundfos recommends using the standard equipped thermistors for motors. The client and the electrician have to install a PTC-relay that complies with the DIN 44082 standard. In that way, the built-in thermistors are used as a standard protection device in Grundfos MG motors above 3 kW.

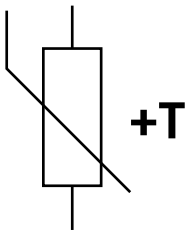

Thermistor / PTC. Only temperature sensitive. The thermistor has to be connected to a control circuit, which can convert the resistance signal, which again has to disconnect the motor. Used in three-phase motors.

PTC sensors

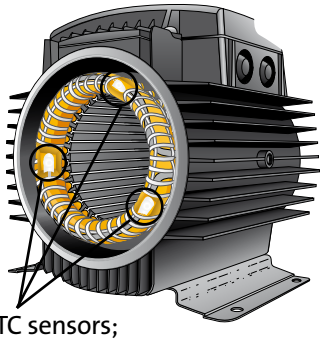

Three PTC sensors;
one in each phase

PTC protection built into windings

7. Motor bearings

What motor bearings do 134
Sleeve and needle bearings 134
Ball bearings 134
Rolling bearings 135
Bearing designations/codes 135
Supplies and boundry dimensions 137
What to know about clearance 137
Selection of bearing internal clearance 138
Selection of initial clearance 138
What to know about bearings in AC motors for pumps 140
Characteristics of deep-groove ball bearings and angular contact bearings 140
Preload 141
The function of preload 142
Sealing 142
What to consider when installing bearing 143
Internal axial forces 143
Preload force 143
Axial bearing capacity and clearance 143
Operating clearance 144
Follow recommendations 144
Relubrication 144
How to estimate the lifespan of a bearing 145
L_{10} or rating life 145
F_{10} or service life 146
L_{10h} bearing lifetime calculation 147
a_1 - Life correction factor for reliability 147
a_2 - Correction factor for special bearing properties 147
a_3 - Correction factor for operating conditions 147
C - Dynamic load rating 147
P - Equivalent dynamic load 147
Loading of the bearing when driving a pump 148
Axial load F_a 148
Radial load F_r 148
Equivalent dynamic bearing load for deep-groove ball bearings (single row) 149
Equivalent dynamic bearing load for angular contact bearings (single row) 149
General considerations of lubrication in relation to bearing life 150
Calculation example 1 150
Calculation example 2 152
How to estimate the lifetime of grease – F10h 154
Defects on bearings 155
High-pressure pumps and motor bearing construction 156
Specially manufactured bearings for motors 156
Hybrid bearings 157
Full ceramic bearings 157
Insulated bearings – ceramic coated bearings 158

What motor bearings do

The main function of motor bearings is to reduce friction and wear on rotating and stationary parts of the motor. Besides, motor bearings provide a relatively rigid support for the output shaft.

Different types of bearings exist: Roller bearings, ball bearings, sleeve bearings and needle bearings.

Sleeve and needle bearings

Sleeve and needle bearings are used in home electrical appliance motors. Normally, this kind of bearings is used in blower applications e.g. in a hairdryer, where a low noise level is important.

Ball bearings

Ball bearings are used in virtually all types and sizes of electric motors for industrial or agricultural applications including pump motors. Roller bearings are sometimes used in connection with large power output motors where maximum shaft load capacity is required. The most important features of ball bearings are:

- They are compatible with a wide range of temperatures
- They are suited for high-speed operation
- They provide low friction loss

Different types of ball bearings and roller bearings exist: Open ball bearings, single shielded ball bearings and sealed ball bearings.

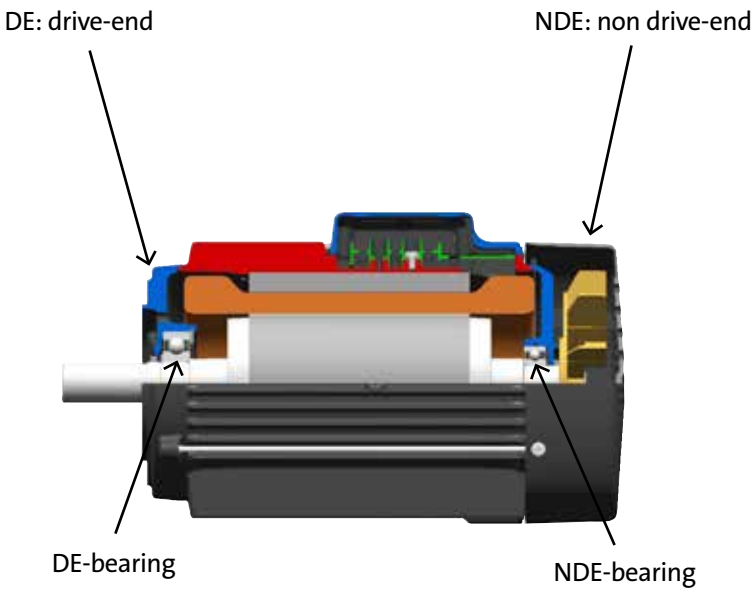

Rolling bearings

Most rolling bearings consist of the same three main components: Rings with raceways (an inner ring and an outer ring), rolling elements (either balls or rollers) and a retainer for the rolling element. The retainer has several functions, e.g. separates the rolling elements, holds them in place between the inner and outer rings and thus prevents them from falling out, and allows them to rotate freely.

We distinguish between two types of rolling elements: Balls and rollers. Balls contact the raceways of the inner and outer rings at certain "points" while the contact of rollers is a line contact. Rollers come in four basic styles: Needle, tapered, cylindrical and spherical. The construction of rolling bearings makes the rolling elements rotate and at the same time they rotate around their own axes. The rolling elements and the bearing rings are exposed to the entire load that is applied to the bearings between the rolling elements and raceway surfaces.

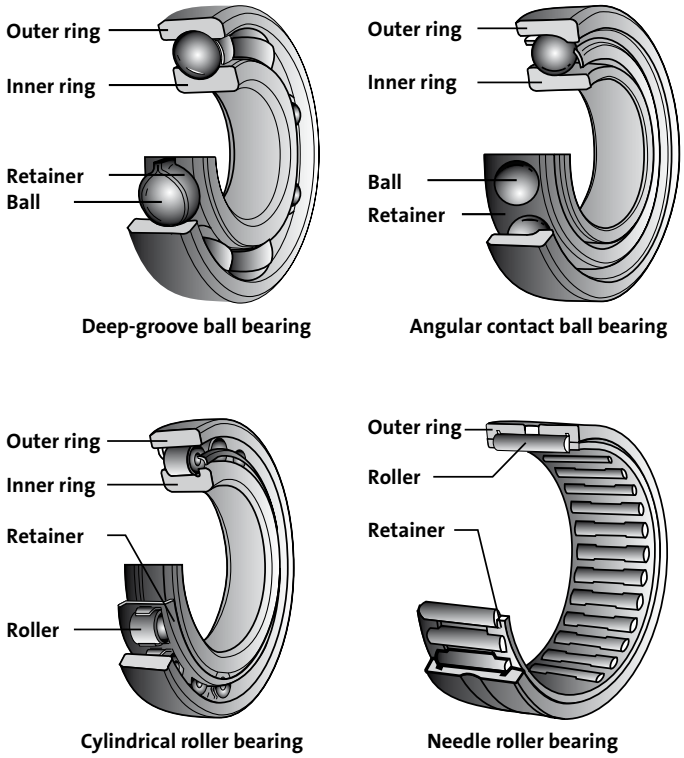

Different types of ball and roller bearings

Bearing designation/code

Bearings have a number code combination that defines a number of factors as to its dimensions, design, internal construction, accuracy, sealing etc. The number is derived from a number of letters and figure codes, and consists of three main groups of codes: A basic number code and two supplementary codes. The order and definition of these codes is shown in the table on the next page. The basic number code contains general information about the bearing design, the boundary dimensions, etc. and contains information about the contact angle code, the bore diameter number and the bearing series code.

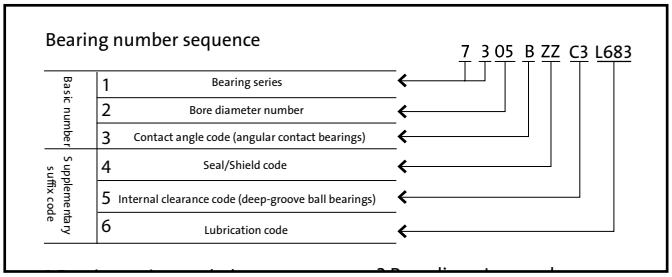

The two supplementary codes are derived from a prefix code series and a suffix code series. These two codes provide information about internal clearance, bearing accuracy, and a range of other factors that relate to internal construction and bearing specifications.

Bearing designation/code

Bearing number sequence

7 3 05 B ZZ C3 L683

Basic number	1	Bearing series
	2	Bore diameter number
	3	Contact angle code (angular contact bearings)
Supplementary suffix code	4	Seal/Shield code
	5	Internal clearance code (deep-groove ball bearings)
	6	Lubrication code

1 Bearing series symbol

Bearing series	Type symbol	Dimension series: width series	Dimension series: diameter series	Bearing type
60 62 63	6	(1) (0) (0)	0 2 3	deep-groove ball bearings
70 72 73	7	(1) (0) (0)	0 2 3	angular contact ball bearings
NU10 NU2 NU22 NU3 NU23 NU4	NU	1 (0) 2 (0) 2 (0)	0 2 2 3 3 4	Cylindrical roller bearings

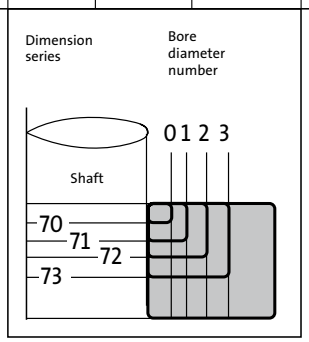

2 Bore diameter number

Bore diameter number	Bore diameter d mm	Remark
04 05 06 ⋮ 88 92 96	20 25 3 ⋮ 440 460 480	Bore diameter number in double digits after dividing bore diameter by 5 or multiply the double digit code by 5 to get the bore diameter in mm. Example: 7305 => 05 x 5 = 25 Bearing bore diameter = 25

3 Contact angle code

Code	Nominal contact angle	Bearing type
A	Standard 30 °	Angular contact ball bearings
B	Standard 40 °	
C	Standard 15 °	

4 Seal / shield code

Code	Description
LLB	Synthetic rubber seal (non-contact type)
LLU	Synthetic rubber seal (contact type)
ZZ	Shield
ZZA	Removable shield

Differs, depends on the manufacturer

5 Internal clearance code

Code	Explanation
C2	Radial internal clearance less than normal
C3	Radial internal clearance greater than normal
C4	Radial internal clearance greater than C3

6 Lubrication code

See bearing manufactures catalogues
example:
L683 = NTN code for Klüberquiet BQH 72-102

Supplies and boundry dimensions

Grundfos motors are fitted with high-quality bearings, from the following manufactures:
SKF
NSK
NTN
FAG (INA)

Because of price, quality and ease of replacement, manufacturers and users of rolling bearings are normally only interested in a limited number of bearing sizes. The International Organization for Standardization (ISO) has therefore laid down dimension plans for the boundary dimensions for metric rolling bearings.

The International Organization for Standardization (ISO) standardizes boundary dimensions and tolerances in ISO 15 and ISO 492.

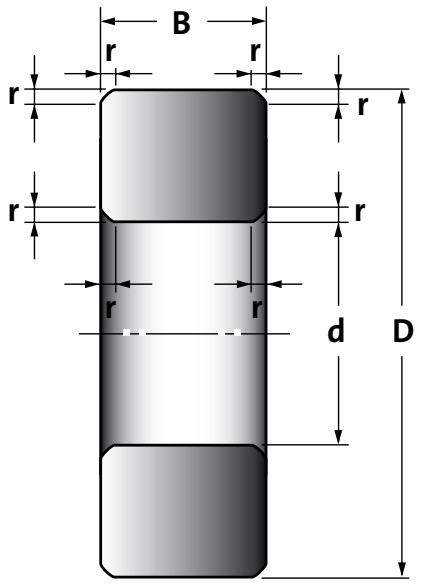

Boundary dimension of radial bearings

What to know about clearance

The bearing's outer ring or inner ring is movable even when the other ring is fixed. Clearance is the amount of movement the ring can make. Two kinds of clearance exist: Radial internal clearance- and axial internal clearance.

The amount of radial movement the ring makes is the radial internal clearance and the amount of axial movement the ring makes is the axial internal clearance. Usually, axial internal clearance is 6-10 times larger than the radial internal clearance.

The American Bearing Manufacturers Association (ABMA) and ISO have elaborated a classification for radial internal clearance for bearings. Five classes of clearance exist: C2, CN, normal clearance, C3, C4 and C5.
C2 is the smallest acceptable clearance and C5 is the largest acceptable clearance in relation to the inner diameter of the bearing.

The radial internal clearance is the gap between the upper ball and the outer runway.

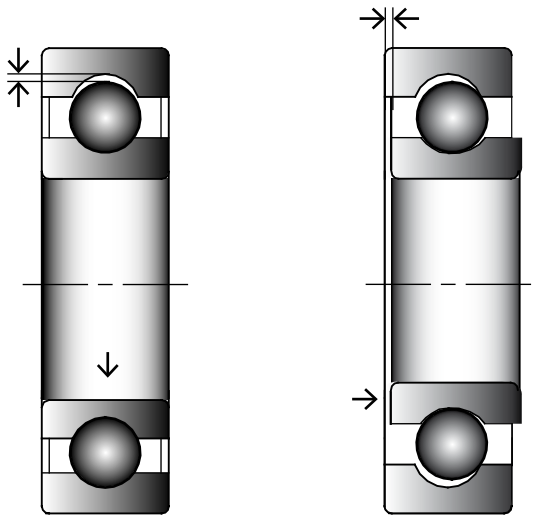

Radial internal clearance Axial internal clearance

What to know about clearance

Selection of bearing internal clearance

Internal initial clearance is the clearance value the bearing is built with. Internal operating clearance is the clearance the bearing has when mounted and during operation. To prolong the life of a bearing the bearing theoretically has to have a slight negative internal clearance value under normal operating temperature.

However, it is difficult to maintain optimum tolerances, under normal operating conditions. Various fluctuating operating conditions can make the negative clearance value even more negative and consequently reduce the lifespan of the bearing because of excessive heat.

When deep groove ball bearings are mainly axially loaded, it will be an advantage to further increase the operating clearance as described on the next page.

It is important to choose an operating internal clearance that has a slightly greater internal operating clearance value than negative internal operating clearance. Under normal operating conditions (i.e. normal load, fit, speed and temperature). Operating clearance value equal to CN provides satisfactory operating clearance in regard to bearing life.

Selection of initial clearance

The initial clearance is the actual clearance value of the bearing before mounting and it is refered to as eg.: C3 or C4. The operating clearance is the actual clearance value when the bearing is mounted and during operation affected by the temperature difference. The operating clearance affects the bearing during operation as to noise, bearing fatigue life and heat.

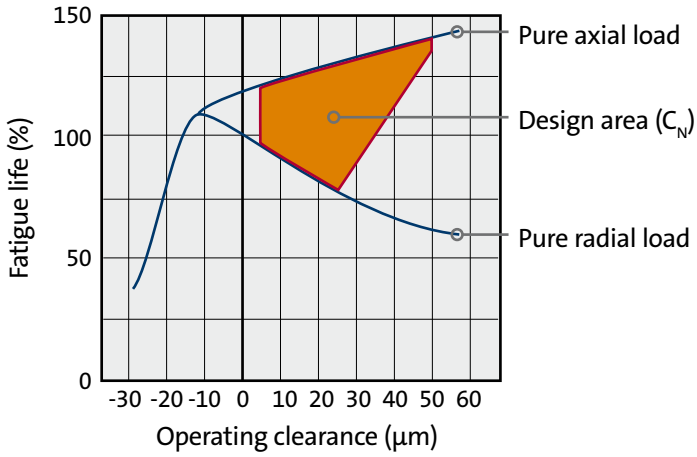

Relation between life and operating clearance for deep-groove ball bearings (principle)

What to know about clearance

The lifespan of a bearing can be long when the clearance is slightly negative. But, when the operating clearance value is below a certain level, the bearing life is very short. Therefore, the initial clearance value has to be defined so that the operating clearance value is slightly positive.

Besides clearance, it is necessary to take the installation dimensions that cause an interference fit between the bearing and the shaft into account. Additionally, it is important to consider the difference of temperature between the inner ring and the outer ring. Generally speaking, the difference of temperature is 10-15 K because the loss in the rotor is transformed into heat and seeps out through the shaft and the bearing.

Because of the tight fittings and the difference in temperature, bearings with C3 clearance are normally used in AC motors. Bearings with C4 clearance are often used in pump motors as DE-bearings. The reason is that a bearing with a C4 clearance can withstand larger axial forces than a bearing with a C3 clearance can. Bearings with C4 clearance have thus a longer lifespan in applications with mainly axial forces like small multistage pumps or non hydraulic reliefed single stage pumps.

It is important always to replace a bearing with another bearing with exactly the same clearance class. If a motor is equipped with C3 bearings and the replacement is done with C4 bearings a risk of noise occurs. If a motor is equipped with C4 bearings and the replacement is done with C3 bearings a risk of lifetime reduction occurs and are therefore not recommendable.

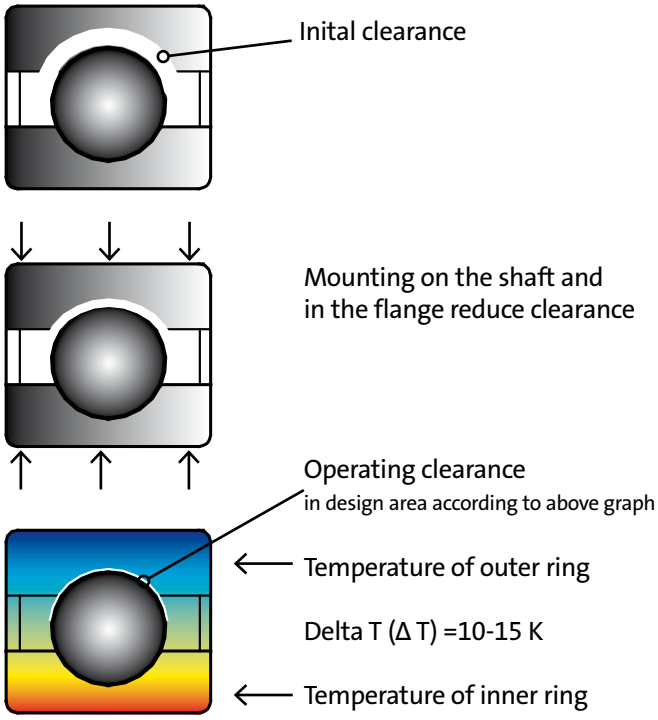

Generally speaking, the difference in temperature is 10-15 K. The temperature difference reduce clearance as the inner ring expand more than the outer ring.

What to know about bearings in AC motors for pumps

Mainly ball bearings are used in standard motors for pumps; the most common kinds being the deep-groove ball bearings and the angular contact bearings. These types are able to withstand the loads that motor bearings are exposed to.

Characteristics of two types of bearings	Deep-groove ball bearings	Angular contact bearings
Version - without seals	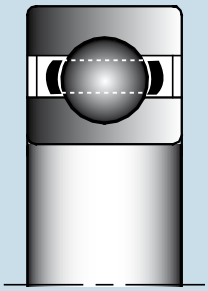	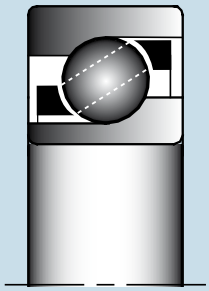
Price	Index 100	Index 160-260
Radial bearing capacity	Index 100	Index 100
Axial bearing capacity	Index 100	Index 300
Permitted axial force transmission	Both directions	Only unidirectional

Characteristics of deep-groove ball bearings and angular contact bearings

Grundfos pump motors come with bearing assemblies, which normally consist of a fixed bearing (DE-bearing) and a bearing with axial clearance (NDE-bearing). Axial clearance is required because of the motor's heat expansion during operation, the production tolerances etc.

Bearing arrangement

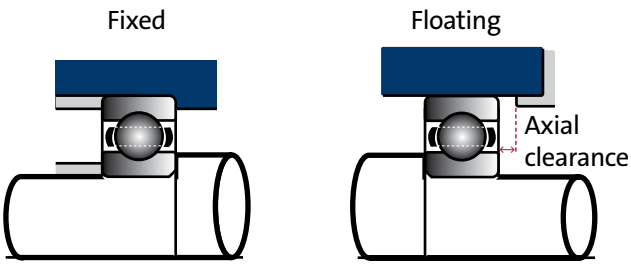

The bearing arrangement is tightened with a spring, which is placed opposite the fixed bearing. The fixed bearing can be either a deep-groove ball bearing or an angular contact bearing.

The illustration to the right shows a fixed DE-bearing with locking rings between the inner ring and the shaft and the outer ring and the flange. This locking method is used in small motors up to frame size 132. In larger motors with a frame size above 132, locking rings and/or bearing covers are normally used so that the outer ring can't move when axial forces are transferred to it.

The illustration to your right shows a bearing assembly with a spring in the NDE and a fixed angular contact bearing in the DE for forces out of the motor. For the angular contact bearing to absorb the axial forces, the bearing has to be installed in a specific way. The large surface on the inner ring is mounted on the bearing shoulder and the large surface of the outer ring is mounted on the flange. With this installation the angular contact bearing absorbs the axial pull.

Preload

In general, bearings are used with a slight internal clearance during operation. In most applications, bearings have an initial load meaning that the internal preload clearance value is equalised by a spring, referred to as spring washer or corrugated spring. This is referred to as preload. Preload is especially applied to angular ball bearings and deep-groove ball bearings with big radial clearance values.

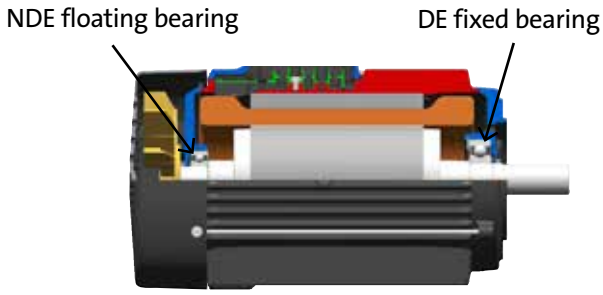

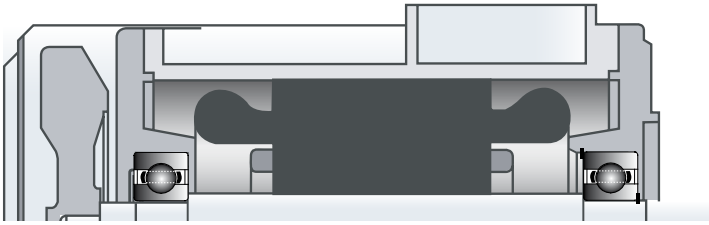

Bearing assembly with floating bearing and spring in the NDE and fixed deep-groove ball bearing in the DE

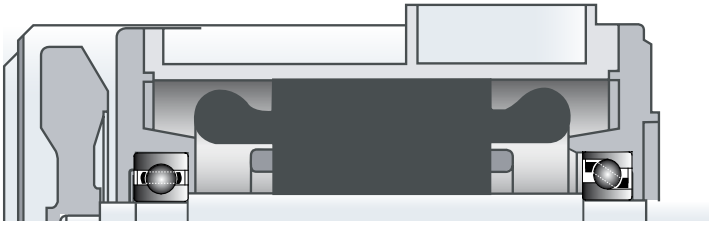

Bearing assembly with spring in the NDE and fixed angular contact bearing in DE for forces out of the motor

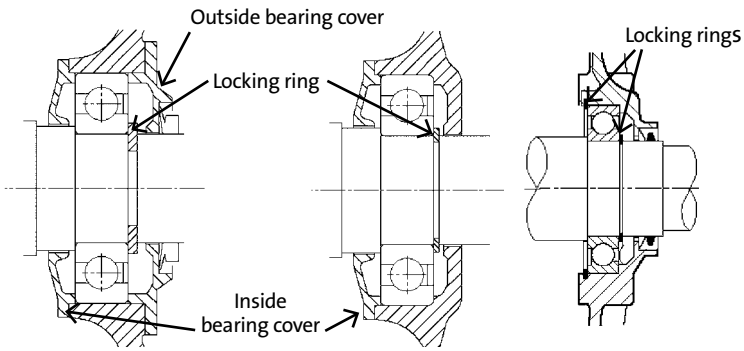

Arrangements for double fixed DE-bearings

What to know about bearings in AC motors for pumps

The function of preload

The rolling elements and the raceway surfaces are constantly under elastic compressive forces at their contact points, when preload is applied to the bearing. Consequently, the bearing is very rigid and even when load is applied to the bearing, radial or axial shaft displacement does not occur.

Preload has several functions:

- Improves locating accuracy and running accuraczy
- Prevents or suppresses noise, vibration and shaft runout
- Reduces smearing, and regulates rolling element rotation

Further, in connection with thrust ball bearings and roller bearings that are installed on horizontal shafts, preloading keeps the rolling elements in correct alignment. Using a corrugated spring together with a floating bearing is one of the most common methods of preloading.

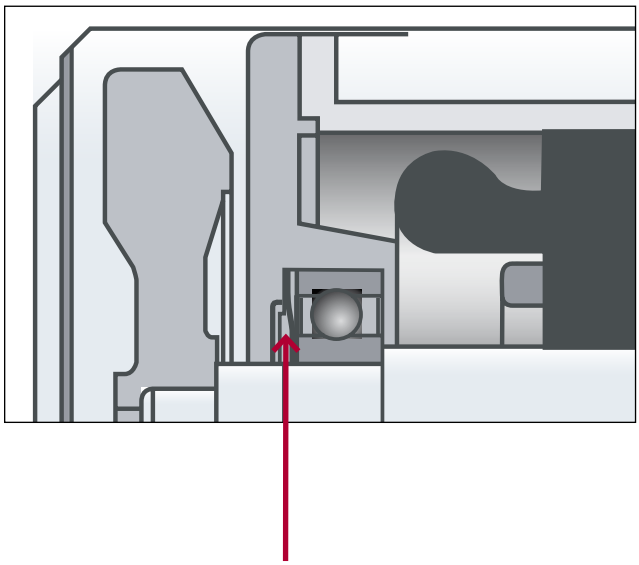

Corrugated spring to secure preload

Sealing

The sealing system in the motor is made according to its IP-classification. In motors with greased-for-life bearings there are several seals: One seal in the bearing itself and one or more seals as a part of the entire motor construction. The bearing seal can either be an anti-friction metal cover plate or a frictional rubber seal. Normally, the gap between the flanges and the shaft is sealed with some sort of rubber seal.

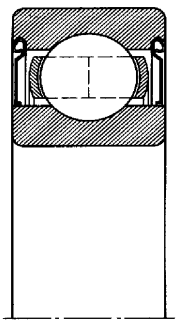

Deep-groove ball bearing with metal cover plates
Often called ZZ

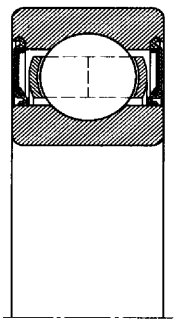

Deep-groove ball bearing with rubber lip seals

What to consider when installing bearings

In this section, we will present some of the most important things to consider when bearing assemblies are installed in electric motors.

Internal axial forces

The construction of the bearing assembly has to work along the axis lengthwise. Installation of a bearing with a loose fit allows for axial movement to occur due to internal axial forces.

Preload force

To counteract noise during operation, the bearing assembly has to be preloaded axially by for example a corrugated spring. The recommended preload force is around 1.5% of the dynamic load rating of the bearing. Dynamic load rings will be covered later on in this chapter.

Axial bearing capacity and clearance

If a deep-groove ball bearing has to provide a slight increase in the axial bearing capacity, the radial clearance has to be close to zero or possibly slightly above zero during operation. Deep-groove ball bearings for motors are often selected with C3 clearance; one class above normal clearance (CN). In some cases C4 bearings are used instead of C3 bearings because they provide slightly more clearance than C3 bearings do.

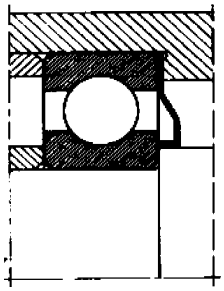

Incorporation of bearing with resilient metal seal washer

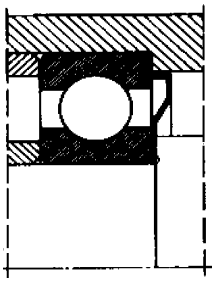

Incorporation of bearing with resillent metal seal

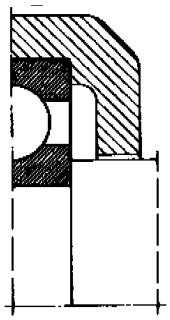

Neck ring

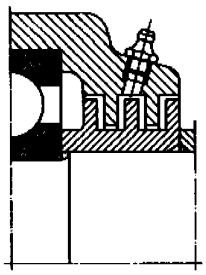

Labyrinth seal

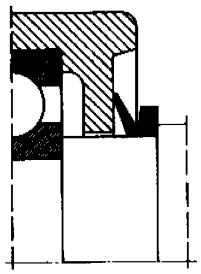

Axial lip seal

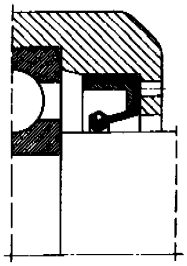

Radial lip seal

What to consider when installing bearing

Operating clearance

The radial clearance of the bearing during operation is the result of the initial clearance in the bearing, diametrical changes due to installation of the bearing (tight fit) and temperature difference across the bearing. Normally the difference in temperature between the inner ring and the outer ring should not be more than 10 to 15 K. Whether to choose a deep-groove ball bearing with C3 or C4 clearance for the DE, depends on the pump type. C4 clearance increases the bearing's load-carrying capacity when axial forces are applied and is less sensitive to difference in temperature.

Bearings with C3 clearance are suitable to absorb the axial forces of pumps with hydraulic pressure relief and of pumps with short operation periods and thus long standstill periods.

Follow recommendations

Always install bearings in accordance with the supplier's recommendations as to diameter tolerances, roundness and angularity of bearing seats.

Relubrication

Relubrication is possible on motors from around 11 kW and up. Small-scale motors are equipped with greased-for-life bearings, which do not need to be relubricated.

Types of pumps	Axial forces	Bearing types and recommended clearance	
		Drive end	Non-drive end
LM/ LP, NM/NP CR (max. 3 kW) TP low head	Moderate to strong forces. Primarily outward pull on the shaft end	Fixed deep-groove ball bearing (C4)	Deep-groove ball bearing (C3)
CR from 4 kW and up	Strong outward pull on the shaft end	Fixed angular contact bearing	Deep-groove ball bearing (C3)
NB, CV, CPV TP high head	Moderate forces. Primarily outward pull on the shaft end (partly hydraulically relieved in the pump)	Fixed deep-groove ball bearing (C3)	Deep-groove ball bearing (C3)
NK, CPH	Small forces (flexible coupling)	Fixed deep-groove ball bearing (C3)	Deep-groove ball bearing (C3)
CR SF	Strong inward pressure	Deep-groove ball bearing (C4)	Fixed angular contact bearing

Bearing assemplies for different pump types.

How to estimate the lifespan of a bearing

On the following pages we will show how to make an estimate of the life of a bearing. In standard motors, lubrication and contamination of the bearings vary a lot, and therefore, the actual working life of the bearings differs. In fact, only few of the bearings in electric motors ever reach their maximum computed age.

The lifespan of a bearing depends on several factors e.g. the load, the lubrication, the speed and the application. Motors with frame size 132 and upward and with closed grease-for-life bearings, do not need to be relubricated. Therefore, the lifespan of bearings is divided into two groups: Rating life (L_{10}) and service life (F_{10}).
In the following paragraphs we will present these two concepts.

L_{10} or rating life

L_{10} is the life in units of either hours or millions of revolutions that 90% of a group of apparently similar ball bearings complete or exceed.

L_{10}, is the lifespan of the bearings. L_{10} is the life in units of either hours or millions of revolutions that the bearings can complete before it needs to be replaced.

L_{10h} = L_{10} defined in hours.

L_{10h} follows statistical distributions, which depend on load ratings, boundary dimensions, and tolerances. The method of calculation is stated in ISO 281:1990 standard and presumes that the bearing is lubricated correctly throughout its lifespan and that it is mounted in the best possible way.

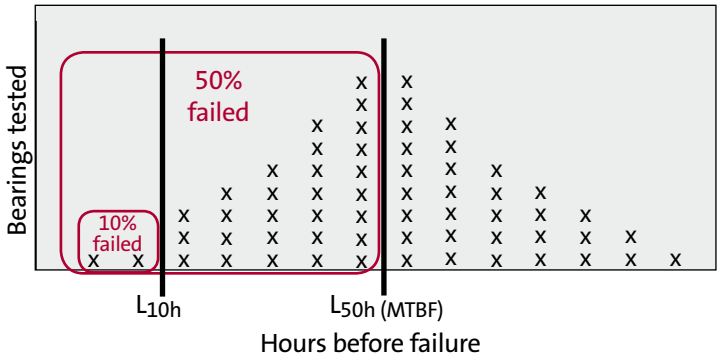

L_{10} is the life in units of either hours or millions of revolutions that 90% of a group of apparently similar ball bearings complete or exceed.

How to estimate the lifespan of a bearing

Another accepted way of indicating the lifespan of a bearing is L_{50h}, also referred to as median life or MTBF-meantime between failure. L_{50h} is the life, which 50% of a group of bearings complete or exceed. Rule-of-thumb: The value of L_{50h} is not more than five times larger than L_{10h}.

Under normal circumstances, L_{10h} (the lifespan of the bearings) lies within the interval of 16,000 - 40,000 hours for motor bearings.

F_{10h} or service life

F_{10h} is an expression of the lifespan of the grease. For how long the grease will last depends on the following factors:

- Type of grease
- The operation temperature
- The size of the bearing
- The mounting
- The speed

No standardised method of calculation exists for the service life of grease F_{10h}. However, leading bearing manufacturers have laid down different methods of calculation so that it is possible to estimate F_{10h}.

The service life of grease F_{10h} lies within the interval of 30,000 - 40,000 hours for motor bearings.

Whether it is L_{10h} or F_{10h} that decides when to replace the greased-for-life bearing depends on which one of the values is the lowest one.

In motors with frame size 160 and up, open bearings that can be relubricated are used. If the relubrication interval is respected, the L_{10h} value can determine when the bearing has to be replaced.

It is more or less impossible to predict precisely how long a bearing's lifespan will be in real life situations. However, calculations provide helpful indications.

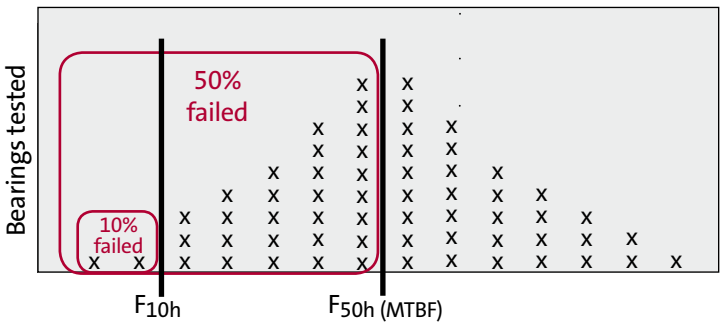

F_{10h} is an expression of the lifespan of the grease

How to estimate the lifespan of a bearing

L_{10h} bearing lifetime calculation

It is possible to calculate L_{10h} bearing life by using the formula on you right hand side. Below we will go through the factors that make up a bearings lifetime L_{10}.

10% of all bearings are worn out once they reach L_{10h}.

a_1 - Life correction factor for reliability

If the L_{1h} life is required (1% of the bearings are worn out once they reach L_{1h}), factor a1 has to be set to 0.21. In all normal cases L_{10h} life is used, where a_1=1.

a_2 - Correction factor for special bearing properties

(Materials and production processes). For standard bearings this factor is always 1.

a_3 - Correction factor for operating conditions

If the lubrication or other operating conditions are better than normal, this factor may be higher than 1. If the operating conditions are poor, the factor may drop far below 1. It is always necessary to know the application to use a correction factor higher than 1. Therefore, factor a_3 is set to 1 when instructive lifetimes are being worked out for motor bearings.

n - Speed of the bearing [min^{-1}]
Similar to the speed of the motor.

C - Dynamic load rating

This value covers the type and the size of the bearing, and is listed in the bearing catalogue.

P - Equivalent dynamic load

This value is an expression of the load that the bearing is exposed to during operation and is calculated on the basis of the standardised rules. Please note that the design method depends on the type of bearing.

$$L_{10h} = a_1 \cdot a_2 \cdot a_3 \cdot \frac{1000000}{60 \cdot n} \cdot \frac{C}{p}^{3}$$

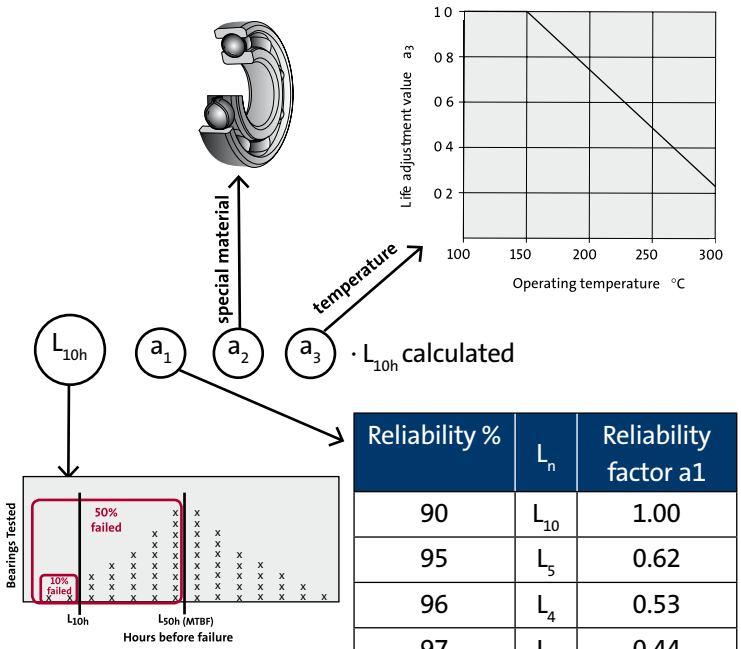

Reliability %	L_n	Reliability factor a1
90	L_{10}	1.00
95	L_5	0.62
96	L_4	0.53
97	L_3	0.44
98	L_2	0.33
99	L_1	0.21

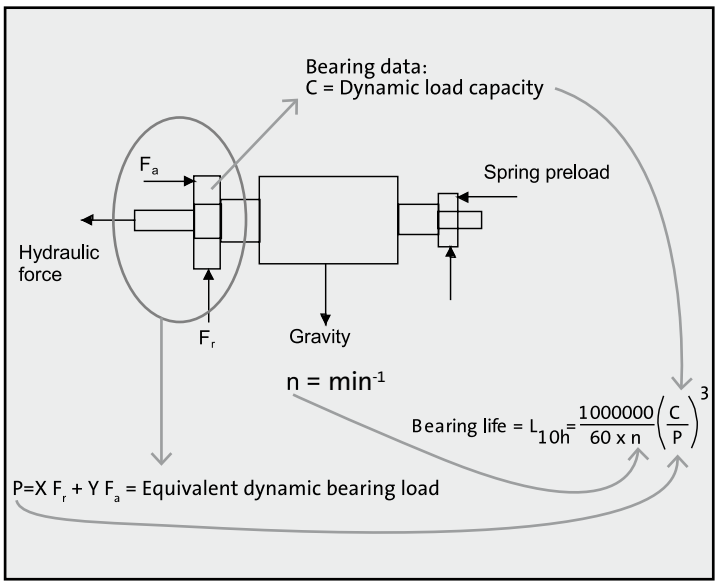

Loading of the bearing when driving a pump

In order to calculate the equivalent dynamic load on the bearing P, it is necessary to know the forces, which have an impact on the bearing. Two kinds of force exist: axial load F_a and radial load F_r.

Axial load F_a

The axial load F_a is calculated by the following formula:

Applies to vertical installation

$$F_a = F_{hydraulic} + F_{spring} + F_{rotor\ gravity}$$

Applies to horizontal installation

$$F_a = F_{hydraulic} + F_{spring}$$

Radial load F_r

The radial load F_r is calculated by the following formula:

Applies to vertical installation

$$F_r = 0.1 \cdot F_a$$

Applies to horizontal installation

$$F_r = 0.1 \cdot F_a + 0.5 \cdot F_{rotor\ gravity}$$

The calculation of F_r by multiplying F_a by factor 0,1 is done empirically on the basis of the specific application (electric motors for pump operation).

Vertical installation

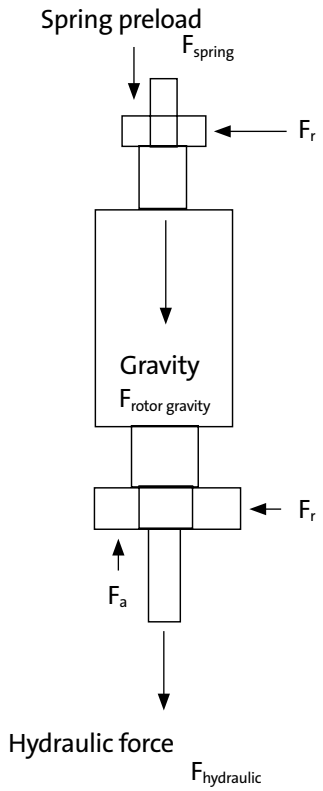

horizontal installation

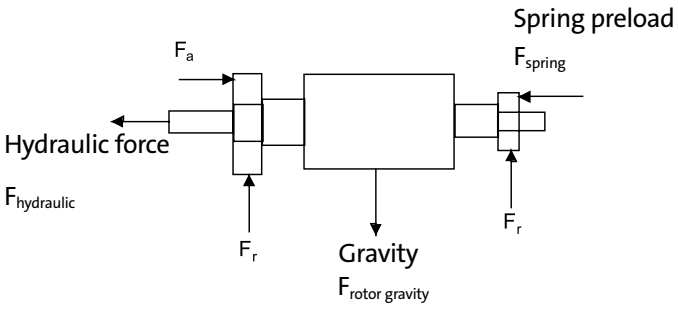

Equivalent dynamic bearing load for deep-groove ball bearings (single-row)

For single row deep-groove ball bearings with the equivalent transient bearing load is calculated by the following formula:

$$P = X \cdot F_r + Y \cdot F_a$$

The X and Y factors are derived from the graphs on your right. To find the Y value it is necessary to define the ratio F_a/C_0. C_0 is the steady-state load rating. It can be found in the bearing catalogue together with the transient load rating C.
The X and Y factors for bearings are illustrated for bearings with normal clearance values (corresponding to bearings with C3 clearance) and values for bearings with incremented clearance (corresponding to bearings with C4 clearance).

Equivalent dynamic bearing load for angular contact bearings (single-row)

For single row angular contact bearings the equivalent transient bearing load is calculated by using the following formula:

$$P = 0.35 \cdot F_r + 0.57 \cdot F_a$$

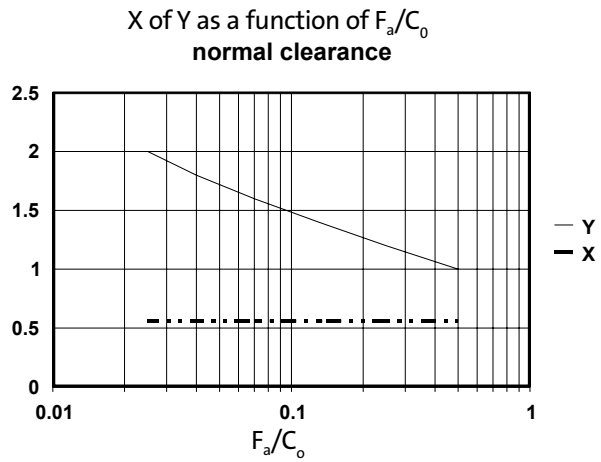

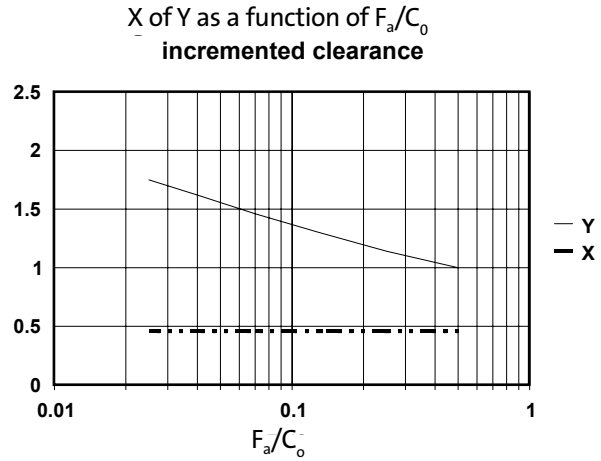

X and Y factors as a function of Fa/C_0 for normal clearance and incremented clearance during operation.

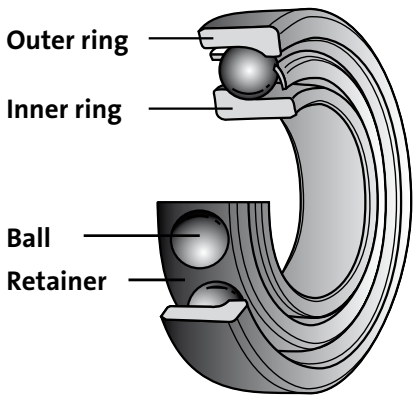

Angular contact ball bearing

General considerations of lubrication in relation to bearing lifetime

The calculated lifespan L_{10h} of greased-for-life bearings with double cover plates is limited by the service life of the grease. For Grundfos motors up to 7.5 kW the expected grease life is between 16,000 and 40,000 hours depending on the ambient temperature, contamination and other operating conditions. For motors that can be relubricated, it is important to follow the manufacturer's recommendations so that the calculated L_{10h} life is the actual life.

On the following pages we will show how to calculate lifetime for deep-groove ball bearings and angular contact bearings.

Calculation example 1:

Axial bearing in 2,2 kW MG motor installed on a CR 32-1 pump (deep-groove ball bearing).

Direction of installation	Vertical installation
Duty point	Q = 15 m^3/h, H = 19 m, 50 Hz
Hydraulic force from pump	505 N
Bearing speed	n = 2900 min^{-1}
Motor	MG90 - 2.2 kW
Axial bearing in motor	Deep-groove ball bearing 6305 with C4 clearance
Lubrication system	No – bearing is greased for life
Rotor mass	4 kg
Preloading of internal corrugated spring in motor	350N
Transient load rating	C = 22500 N
Steady-state load rating	C_0 = 11600 N

Data for use in design example 2.2 kW MG motor in CR 32-1 pump.

Step 1: Forces on bearing

Vertical installation

$$F_a = F_{hydraulic} + F_{spring} + F_{rotor\ gravity}$$

$$Fa = 505\ N + 350\ N + 40\ N = 895\ N$$

$$F_r = 0.1 \cdot F_a$$

$$F_r = 0.1 \cdot 895 = 90\ N$$

Step 2: Calculation of equivalent transient bearing load

$$F_a/C_0 = 895\ N / 11600\ N = 0.08$$

The X and Y factors are read in the graph. The bearing has a C4 clearance, and the values for incremented clearance in a finished motor should therefore be used. The read values are: X = 0.46 and Y = 1.43.

The equivalent transient load can be calculated in the following way:

$$P = 0.46 \cdot F_r + 1.43 \cdot F_a$$

$$P = 0.46 \cdot 90\ N + 1.43 \cdot 895 = 1321\ N$$

X of Y as a function of F_a/C_0

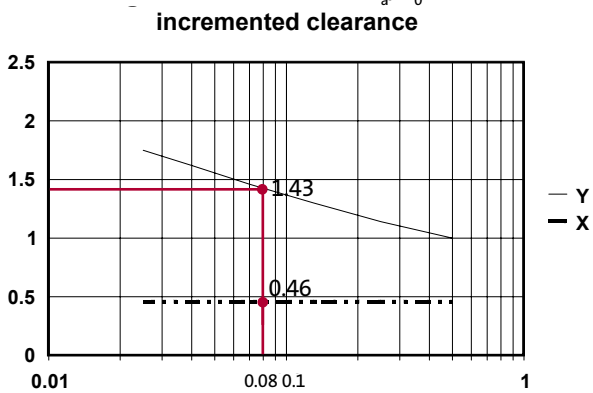

Step 3: Calculation of L_{10h} bearing life.

$$L_{10h} = a_1 \cdot a_2 \cdot a_3 \cdot \frac{1000000}{60 \cdot n} \cdot \left(\frac{C}{P}\right)^3$$

$$L_{10h} = 1 \cdot 1 \cdot 1 \cdot \frac{1000000}{60 \cdot 2900} \cdot \left(\frac{22500}{1321}\right)^3 = 28000h$$

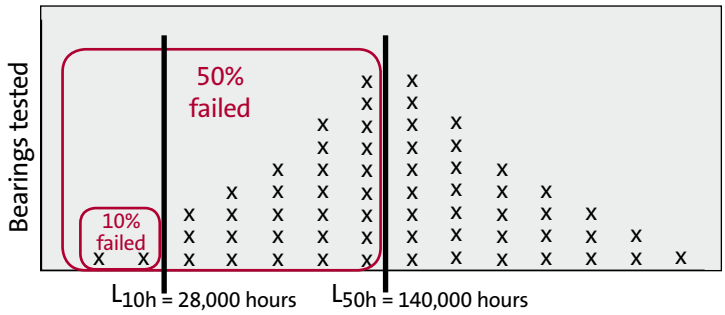

Hours before failure

Step 4: Assessment of the calculated bearing life

The calculated bearing life L_{10h} = 28,000h. However, different factors, e.g. temperature, contamination etc.
can reduce the life of the grease, and therefore the lifespan can be shorter than the calculated bearing life L_{10h}.

Calculation example 2:

Axial bearing in 18.5 kW motor installed on CR 45-3-2 pump (angular contact bearing).

Direction of installation	Vertical installation
Duty point	Q = 26 m^3/h, H = 98 m, 60 Hz
Hydraulic force from pump	1 x 1262 + 2 x 947 = 3156 N
Revolutions per minute of bearing	n = 3516 min^{-1}
Motor	Siemens 18.5 kW
Axial bearing in motor	Angular contact bearing 7309B
Lubrication system	Yes – relubrication after 3000 operating hours
Rotor mass	21 kg
Preload via internal corrugated spring in motor	400 N
Transient load rating	C = 60500 N
Steady-state load rating	C_0 = 41500 N

Data for use in design example 18.5 kW Siemens motor in CR 45-3-2.

Step 1: Forces on bearing

$$F_a = F_{hydraulic} + F_{spring} + F_{rotor\ gravity}$$

$$F_a = 3156\ N + 400\ N + 210\ N = 3766\ N$$

$$F_r = 0.1 \cdot F_a$$

$$Fr = 0.1 \cdot 3766\ N = 377\ N$$

Step 2: Calculation of equivalent transient bearing load

$$P = 0.35 \cdot F_r + 0.57 \cdot F_a$$

$$P = 0.35 \cdot 377\ N + 0.57 \cdot 3766\ N = 2279\ N$$

Step 3: Calculation of L_{10h} bearing life

$$L_{10h} = a_1 \cdot a_2 \cdot a_3 \cdot \frac{1000000}{60 \cdot n} \cdot \left(\frac{C}{P}\right)^3_{(h)}$$

$$L_{10h} = 1 \cdot 1 \cdot 1 \cdot \frac{1000000}{60 \cdot 3516} \cdot \left(\frac{60500}{2279}\right)^3 = 88000h$$

Step 4: Assessment of the calculated bearing life

The calculation of bearing life L_{10h} = 88,000h. To avoid that the life of the grease reduces the bearing lifetime, the bearing has to be lubricated every 3000 hours.

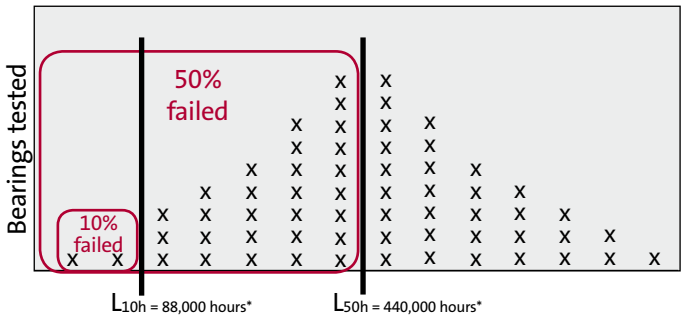

Hours before failure

* if bearings are relubricated minimum every 3000 hours for this specific example

How to estimate the lifetime of grease – F_{10h}

Bearings in standard motors are either greased-for-life bearings or relubricated bearings. In general, motor bearings are exposed to more heat than other bearings. The friction heat from the rotation loads them and at the same time they are heated by the heat loss from the motor windings and the rotor. Therefore grease with high temperature resistance is well suited for motor bearings. All suppliers of bearings provide an assortment of grease particularly suitable for electric motors.

The basic lubrication interval is determined on the basis of the characteristic bearing value. The illustration on your right side shows a simplified curve for high-temperature grease for motors. The basic lubrication interval $\mathbf{t_f}$ is an expression of the grease life - F_{10h} with a failure rate of approximately 10%.

If there are any deviations in the basic lubrication interval $\mathbf{t_f}$, the lubrication interval has to be reduced $\mathbf{t_{fq}}$ by some reduction factors.

$$F_{10h} \text{ or } t_{fq} = t_f \cdot f_2 \cdot f_3 \cdot f_4 \cdot f_5 \cdot f_6$$

Sometimes the reduced relubrication interval is much shorter than the basic relubrication interval under varying operating conditions. If the reduced relubrication interval is not respected it can lead to a considerable higher failure rate.

Basic lubrication interval

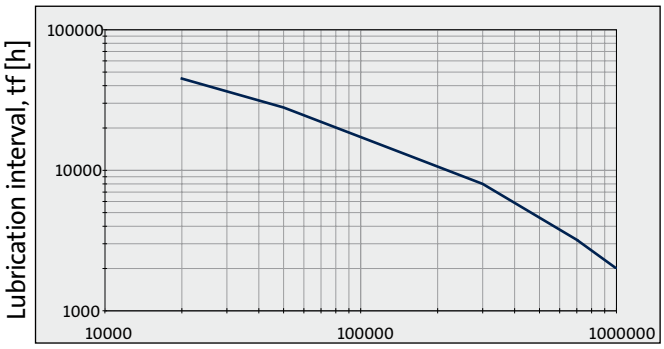

Bearing value (mm/min)

t_f = basic lubrication interval, $t_{fq} = F_{10h}$

The bearing value = $K_f \cdot n \cdot d_m$ [mm/min]

K_f : Type of bearing
Deep-groove ball bearings = 1
Angular contact bearings = 1.6

n : Speed of bearing [min^{-1}]

d_m : Average diameter of bearing = $\frac{D+d}{2}$ [mm]
D = outer diameter of the bearing [mm]
d = the inner diameter [mm]

Reduction factor		Reduction level	Reduction values
f_1	Dust and humidity on working faces of bearing	Moderate	f_1 = 0.9 to 0.7
		Heavy	f_1 = 0.7 to 0.4
		Very heavy	f_1 = 0.4 to 0.1
f_2	Impact from dust-like load and vibrations	Moderate	f_2 = 0.9 to 0.7
		Heavy	f_2 = 0.7 to 0.4
		Very heavy	f_2 = 0.4 to 0.1
f_3	Increased bearing temperature (the f3 factors stated apply to high-temperature grease)	90°C	f_3 = 0.9 to 0.6
		105°C	f_3 = 0.6 to 0.3
		120°C	f_3 = 0.3 to 0.1
f_4	Incremented load	P/C* = 0.1 to 0.15	f_4 = 1.0 to 0.7
		P/C = 0.15 to 0.25	f_4 = 0.7 to 0.4
		P/C = 0.25 to 0.35	f_4 = 0.4 to 0.1
f_5	Air flow through bearing	Poor flow	f_5 = 0.7 to 0.5
		Intensive flow	f_5 = 0.5 to 0.1
f_6	Vertical shaft	Seal dependant	f_6 = 0.7 to 0.5

* P = Equivalent transient load
C = Transient load rating of the bearing

Defects on bearings

Bearings are the components in the motor that are the most exposed to wear. The most frequent reason to carry out service on a motor is bearing problems. When we divide the bearing defects into subgroups, it becomes clear that the most recurring cause of failure in connection with bearings has to do with lubrication. The second most common cause of failure is contamination. Because of external factors less than 1% of all bearings reach the working life, which they could have had under ideal conditions.

When a bearing fails, it can be difficult to detect the exact reason. The most common causes of failure for pump motor bearings are:

- Ordinary wear
- Reduced or worn out lubrication
- Too high ambient temperature
- Pump overload
- Corrosion
- Bearing currents from frequency converter drive
- Misalignment
- Damage due to transport
- Vibrations

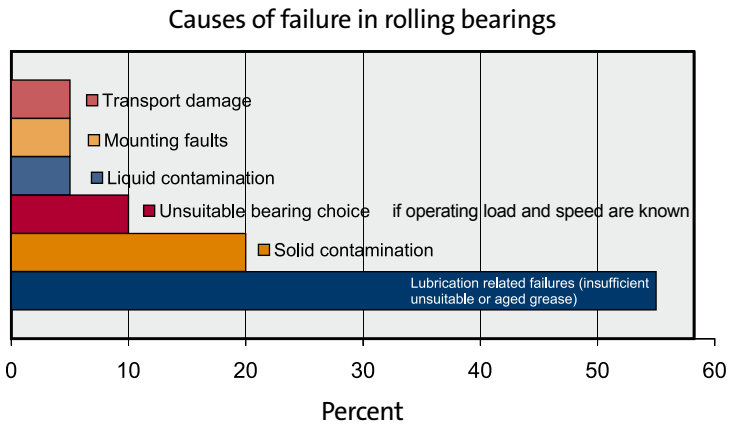

Causes of failure in rolling bearings.
Only about 1% of all rolling bearings reach expected life.

High-pressure pumps and motor bearing construction

High-pressure pumps for high-pressure applications are a part of the Grundfos product portfolio. The difference between a high-pressure pump and a standard pressure pump is that the chamber stack in the high-pressure pump is turned upside down to protect the shaft seal. Instead of pulling the shaft out of the motor, the high-pressure pump presses the shaft into the motor because of the hydraulic axial forces.

Compared to standard pumps the bearing assembly is turned upside down to absorb the pressure from the pump. The bearing in the NDE is mounted as a locked angular contact bearing to absorb the pressure and the bearing in the DE is mounted as a floating deep-groove ball bearing.

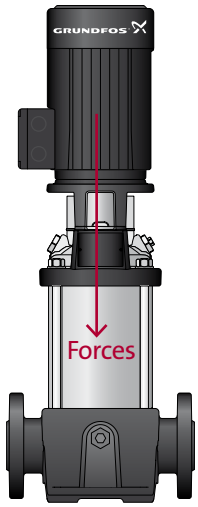

NDE:
Floating deep-groove ball-bearing

DE:
Locked angular contact bearing

Standard CR

Hydraulic forces from pump out of motor

Specially manufactured bearings for motors

Frequency converters make it possible to control the speed of a motor and adapt the speed to varying loads. These motors can generate stray currents that result in electrical arcing through the bearing and can lead to bearing failure. To prevent this from happening, coatings made of special materials are used on the rings and balls of the bearings. However applying these coatings is an expensive and time-consuming process.

The latest bearing types in the market make use of the spin-off effect from the aviation industry, where the following three types of bearings are used:

- Hybrid bearings
- Full ceramic bearings
- Ceramic-coated bearings

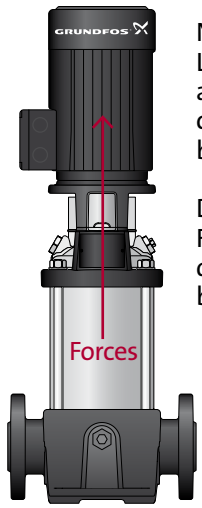

NDE:
Locked angular contact bearing

DE:
Floating deep-groove ball bearing

High pressure CR

Hydraulic forces from pump into motor

Specially manufactured bearings for motors

As we have stressed several times during this chapter, lubrication problems are the greatest failure of most motors today. Ceramic balls considerably reduce lubrication problems because they provide lower operating temperatures and hard particle resistance.

Hybrid bearings

The raceways of hybrid bearings are made of steel and the ball bearings are made of ceramic; typically silicon nitrid. Compared to steel bearings, hybrid bearings have the following advantages:

- They can achieve higher speed and greater accuracy
- They have a longer service life

The advantages speak for themselves. Today, hybrid bearings are finding increased usage in a wide variety of engineered applications.

The disadvantage of hybrid bearings is that they are more expensive than standard bearings. Even though hybrid bearings continue to be more and more affordable, they are not always the most economic solution.

Full ceramic bearings

Full ceramic bearings are as the name implies made entirely of ceramics. Full ceramic bearings offer the following advantages:

- Special electrical and magnetism resistance
- Resistant to wear and corrosion
- Lubrication and maintenance-free especially in high- and low-temperature applications
- Resistant to aggressive environments

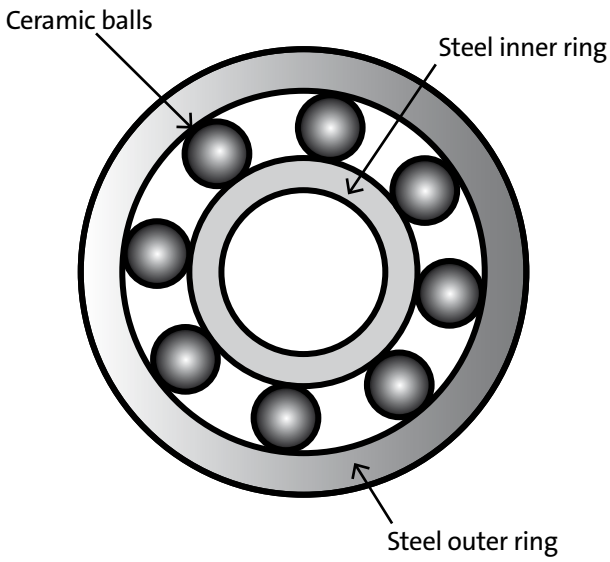

Hybrid bearings

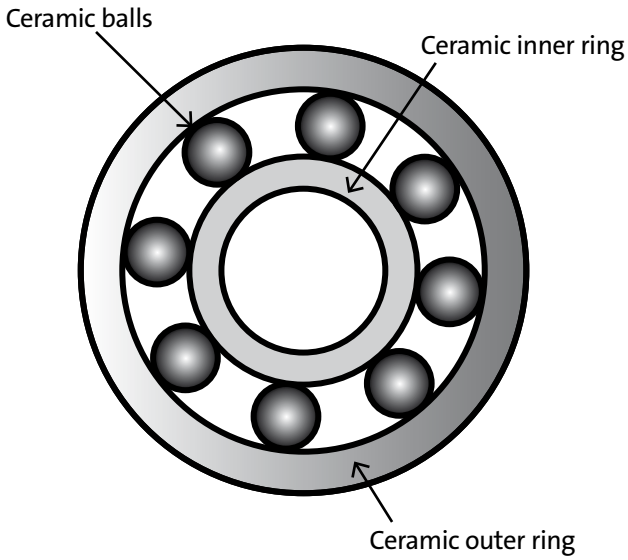

Full ceramic bearings

Specially manufactured bearings for motors

Insulated bearings
- Ceramic coated bearings

This type of bearings has a ceramic coat on either the outer ring, the inner ring or on both. The balls are made of steel, and so are the inner and the outer ring on the inside. Insulated bearings differ from both hybrid and ceramic bearings as to service life, temperature resistance and rigidity. Insulated bearings are mainly used to avoid bearing breakdown caused by bearing current from the frequency converter.

The insulating coating on the outer ring of the bearing is made of aluminium oxide, which is applied to the bearing by plasma spraying technology. This kind of coating can resist a 1000 V dielectric breakdown voltage.

Electrically-insulated bearings come in many types. Most common bearing types include cylindrical roller bearings and deep-groove ball bearings with outside diameters larger than 75 mm – that is bearings larger than 6208.

Like hybrid and ceramic bearings, insulated bearings are more costly than standard bearings though they continue to be more and more affordable. Insulated bearings are used more and more frequently as standard as NDE bearings in frequency-controlled motors with frame size 250 and up.

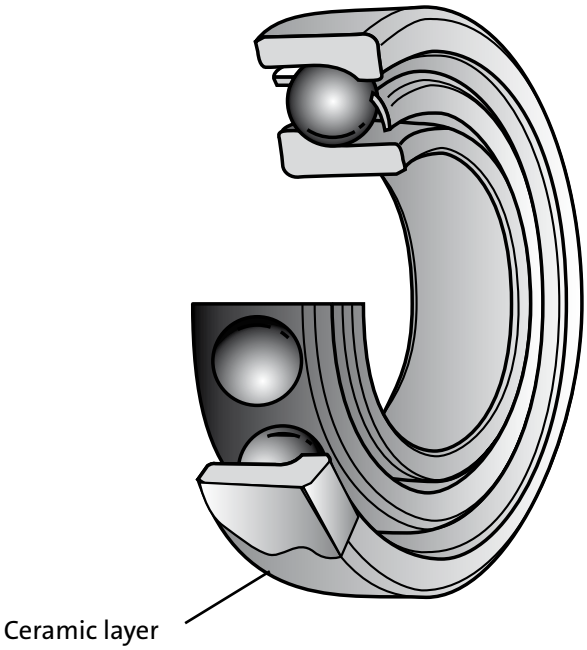

Insulated bearings - ceramic coated bearings

7. Motor bearings

GRUNDFOS
CRE 15
GRUNDFOS

8. Frequency converter operation

Frequency converter 162
Input filter 163
Rectifier 163
Energy storage circuit or intermediate circuit 163
Inverter 163
The function of the inverter 164
Output pulses from the inverter 166
Output filters for frequency converters 168
Bearing currents in relation to operation of frequency converters 171
Specially manufactured bearings 172
Hybrid bearings 172
Full ceramic bearings 173
Insulated bearings - ceramic coated bearings 173
Precaution and frequency converter operation 174
Motors without phase insulation 174
Motors with phase insulation 174
Motors with reinforced insulation 174
Recommendations 175

Frequency converter

A complete installation with a frequency converter controlled motor consists of a series of different components which should all be selected carefully for a given application.

The components in an installation are selected according to the actual application, starting with selecting the right pump for the application. A suitable motor for the actual pump is chosen. The output filter of the frequency converter has to be able to handle the full load of the pump, and at the same time fit the frequency converter. The frequency converter should have the right power rating for the pump, and the fuses and the protective circuit breaker should fit the frequency converter.
What follows is some information about how to choose the right components.

A frequency converter makes it possible to control the speed (rpm) of an asynchronous motor. This is done by controlling the output frequency to the motor.

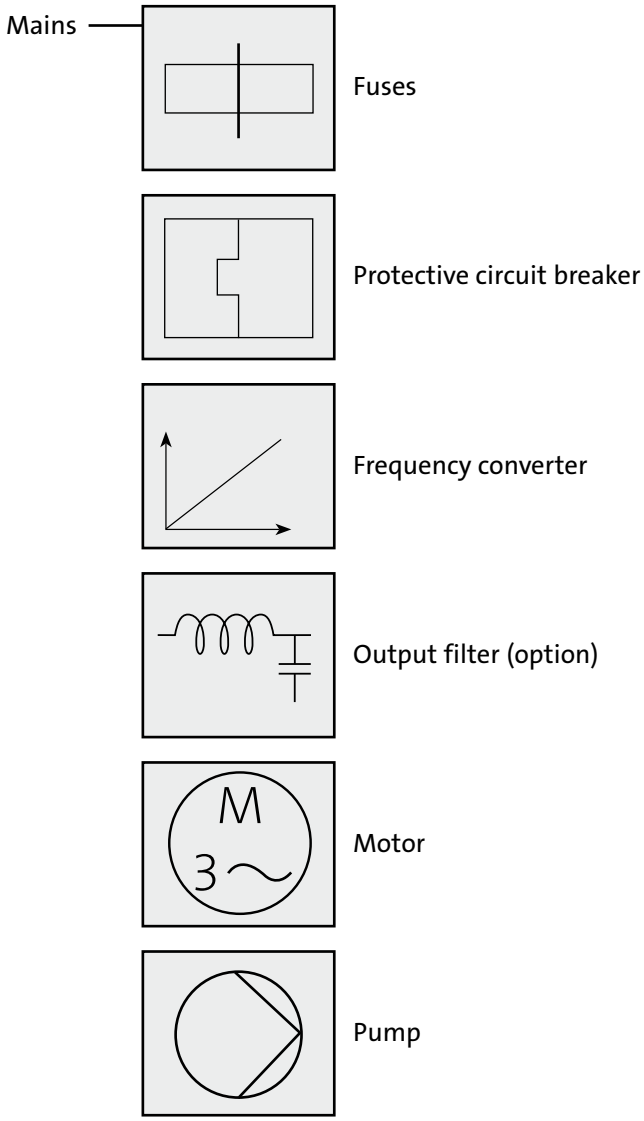

Components in a typical installation

Frequency converter

In this section we will focus on the power handling section of the frequency converter. A standard frequency converter is shown to the right, the power-handling sub- circuits are:

- Input filter
- Rectifier
- Energy storage circuit or Intermediate circuit
- Inverter

The function of the different components in the sub circuit is:

Input filter

The input filter prevents that noise generated inside the frequency converter reaches other components connected to the mains. It also prevents that noise from the mains reaches and disturbs the frequency converter.

Rectifier

The rectifier rectifies the mains voltage into a pulsating DC voltage.

Energy storage circuit or intermediate circuit

The pulsating DC voltage from the rectifier is sent to the energy storage circuit, where it is transformed into a DC voltage with an additional AC ripple. The magnitude of the AC ripple depends on the load on the inverter. No load means no ripple.

Inverter

The inverter converts the DC voltage into an output voltage of variable frequency and amplitude. The inverter has six switches that can either be switched on or off.

In the next section we will concentrate on the performance of the inverter.

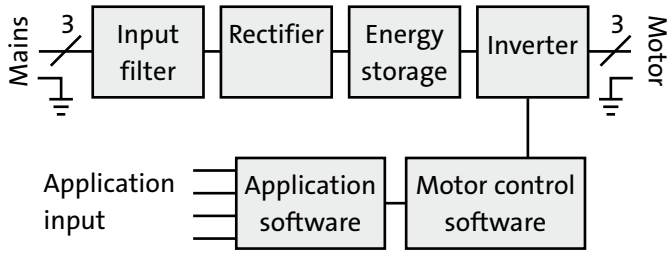

Standard frequency converter

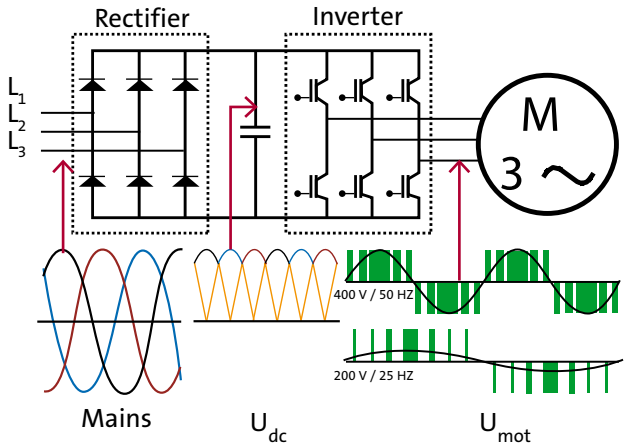

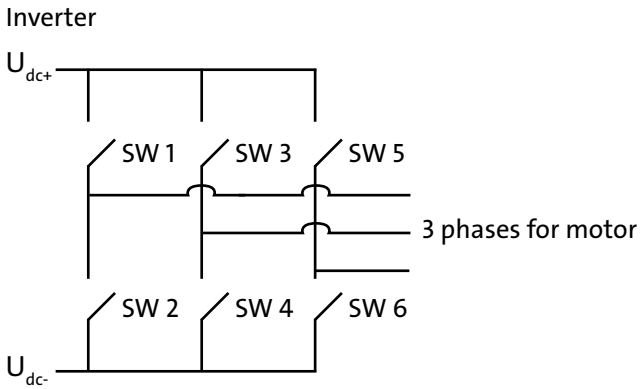

The inverter has six switches that can either be switched on or off.

The function of the inverter

The six switches in the inverter are switched in a pattern so that a circulating field is created in the stator. The switch pattern reflects the actual output voltage and frequency of the frequency converter.

As it appears from the diagram to the right, the output phases can only be connected to either U_{dc+} or U_{dc-} or not connected at all. Switch 1 and switch 2 can never be switched on at the same time. However, if it should happen anyhow, a short-circuit inside the frequency converter will be created. Consequently, the frequency converter might be damaged by the short-circuit. In the following section we will look at the actual output voltage at a specific switch pattern.

The voltage between output phase A and output phase B is calculated in the following way:

$$U_A - U_B = U_{dc+} - U_{dc-}$$

The U_{dc+} voltage is calculated as
(Earth acts as reference)

$$U_{dc+} = (U_{mains} \cdot \sqrt{2})/2$$

Where U_{mains} is the mains input voltage to the frequency converter. U_{dc+} in a typical European installation with U_{mains} = 400 V is calculated as follows:

$$U_{dc+} = (400\ V \cdot \sqrt{2})/2 = 283\ V$$

U_{dc-} is calculated in the same way but with opposite polarisation when Earth potential is used as reference:

$$U_{dc-} = -283\ V$$

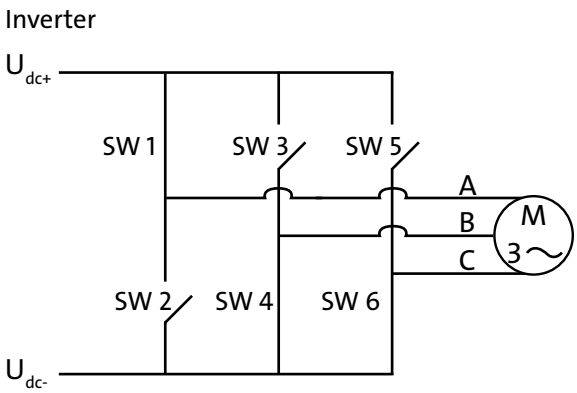

The function of the inverter

Now, let us have a look at the voltages, which are supplied to the motor. On the 3 diagrams to the right side you can see 3 different states of the inverter switches. On the first diagram the voltage applied to the motor is:

$$U_A - U_B = 0\ V$$

On the second diagram, the voltage applied to the motor is:

$$U_A - U_B = 283\ V - (-283\ V) = 566\ V$$

On the third diagram, the voltage applied to the motor is:

$$U_A - U_B = 0\ V$$

3 different states of the inverter switches

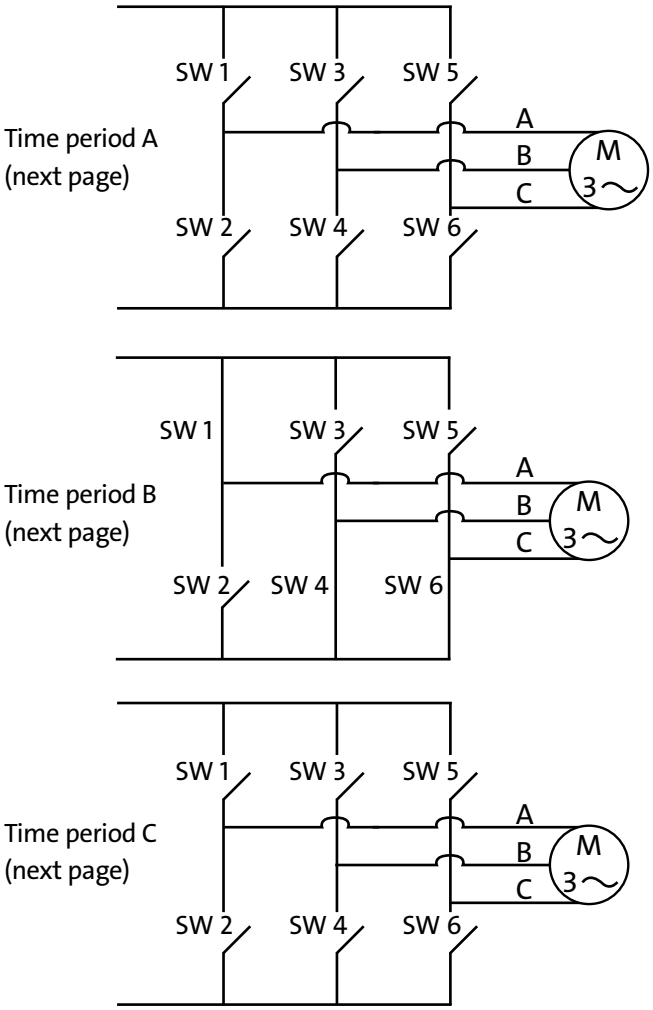

Output pulses from the inverter

Another way to present the output pulses from the inverter is shown in the diagram to the right.

When we look at the pulse we get an understanding of the basic function of a frequency converter. A frequency converter produces a series of pulses in a specific pattern between the three output phases, and the stator is opposed to these pulses. The output voltage (rms) of these pulses corresponds to the actual output frequency. The rms value of the output pulses depends on the duration of the pulses. Longer pulses equal a higher voltage. In the next section, we will concentrate on these pulses and on the problems they cause.

The output voltage change per time unit can be cha-racterised by ΔU/Δt or in mathematical terms: dU/dt. The figure to the right reaches dU/dt infinity. This is not the case in practice. A transition takes time. The switches in the inverter are made of semi-conductors. It takes time to bring them from a non-conducting mode to a conducting mode. So if we look at a real transition, we expect that dU/dt reaches a specific value.

As an example, let us have a look at the data from the previous section. The transition time is for example 0.3 µs.

$$dU/dt = 565\ V / 0.3\ \mu s = 1883\ V/\mu s$$

The value of dU/dt is determined by the components used in the frequency converter.
The manufacturers of frequency converters tend to minimise the transition time, because it minimises the losses inside the frequency converter. We expect that dU/dt will increase in the future due to the fact that there is a constant demand for smaller sized frequency converters. A way to make them smaller is by minimising the power losses. A high value of dU/dt has an impact on the insulation system used in the

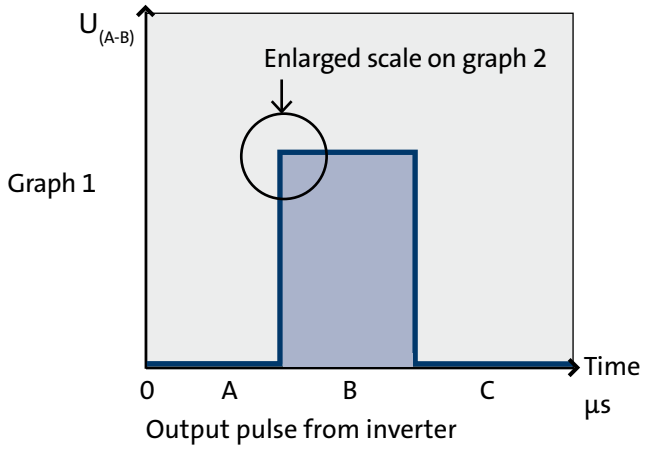

Output pulse from inverter

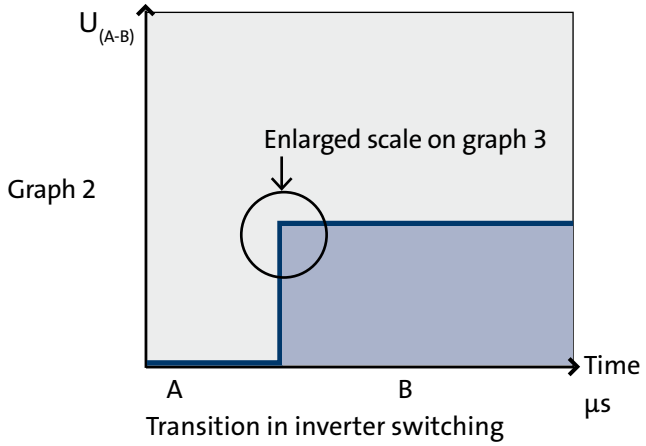

Transition in inverter switching

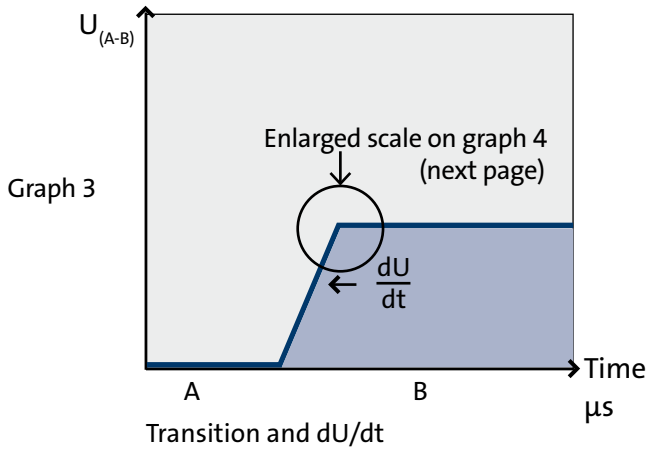

Transition and dU/dt

motor dU/dt decreases with increasing cable length. The longer the cable between the frequency converter and the motor the lower the dU/dt value. The reason is that the cable introduces some inductance in the circuit which has an impact on the dU/dt value.
In the next section we will look at filters that reduce dU/dt. These filters are mainly used to protect motors against too high dU/dt and U_{peak} .

U_{peak} is another factor that influences the lifespan of the insulation system inside the motor. The previous figures show the output voltage of the converter operating under ideal conditions. However, in real-life situations a cable connects the frequency converter and the motor. This cable affects the output voltage of the frequency converter.

The U_{peak} voltage comes from capacitance in the cable. This U_{peak} voltage is high, and the insulation system inside the motor is opposed to this high voltage, every time the inverter sends out a pulse, and that is done a thousand of times per second. To some extent the U_{peak} depends on the length of the cable, because the capacitance in the cable increases with increasing cable length.

The U_{peak} voltage is typically not a problem if the cable that connects the motor and the frequency converter is short (less than 15 – 20 m).

On the previous pages we have seen that the problem in running motors with frequency converters is that the actual output voltage is a series of pulses. This stresses the insulation system inside the motor due to the presence of dU/dt and U_{peak}.
On the following pages we will look at how to reduce the stress on the motor insulation.

Graph 4

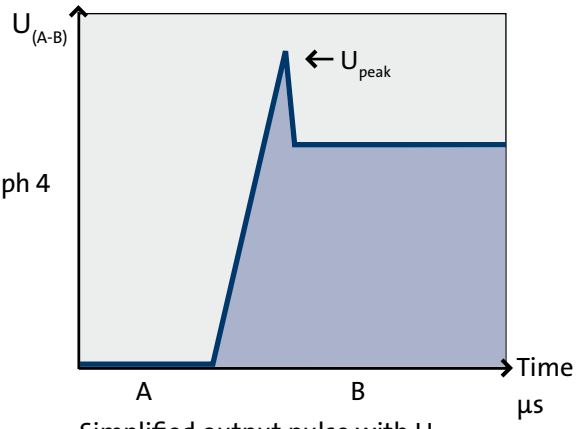

Simplified output pulse with U_{peak}

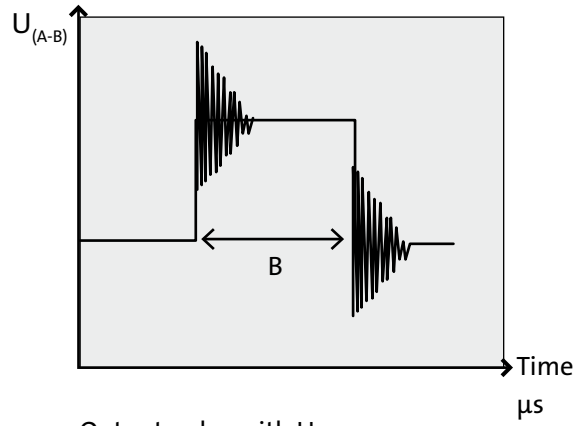

Output pulse with U_{peak}

Output filters for frequency converters

A filter at the output of the frequency converter reduces the stress on the motor insulation.
There are a series of different output filter types.

The basic function of output filters for frequency converters is to reduce the values dU/dt and U_{peak}. When the values are reduced the waveform of the curve changes from a square to something more sine-shaped . The reduction of the values dU/dt can be made by means of different filters:

- Output reactors (also known as motor coils)
- LC filters

The typical way of reducing the values dU/dt is by connecting some kind of reactor in series with the motor windings. Additional components such as capacitors can be added to the system to get a better filter performance. If the dU/dt values decrease, the U_{peak} decreases as well. In that way the risk of overshoot (U_{peak}) is minimised, because the charging and discharging of the cable is slower. Introducing a filter at the output has some implications. We will look into that on the following pages.

An output filter has some power losses. The size of the loss depends on the switching frequency of the frequency converter. It is common to reduce the switch frequency, when an output filter is connected to reduce the power loss. However, installing an output filter will always affect the overall efficiency of the system. It is not possible to make a filter without some degree of loss. You can find information about the maximum switching frequency for output filters in manuals and design guides.

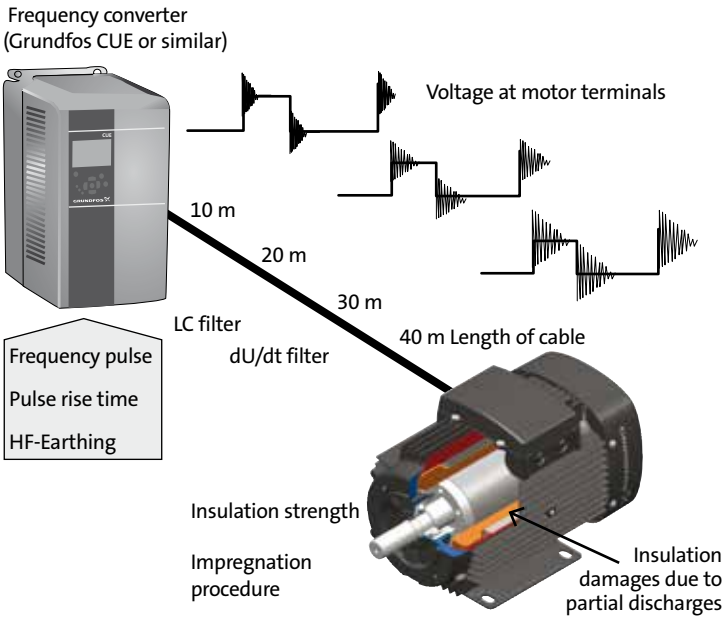

Reasons for overvoltage problems which can cause motor insulation damage due to partial discharges in the motor windings

Output filters for frequency converters

An output filter introduces a voltage loss (voltage drop across the reactors) between the frequency converter and the motor. In this situation the motor will have a lower voltage than without a filter. This is NOT a problem in a normal situation. However, the output voltage of a frequency converter can never exceed the input voltage. The introduction of an output filter in such a situation will lead to an additional voltage drop. The motor will draw a slightly higher current from the frequency converter, the slip in the motor will increase, and consequently, the pump's performance will drop.

Because of the conversion from a square wave to a more sine-shaped pulse, output filters for frequency converters make some noise. The reactors in the filter are opposed to the switch frequency of the converter. This construction brings along some noise, due to the forces that act upon the reactors when the voltages changes in square waves. A lot of filters are encapsulated in order to reduce the noise, and to give the filter a better thermal performance. When the output filter is installed, a small change in the noise level might occur.

Filters with capacitors connected to the ground represent another problem, which should be dealt with during the design of the application solution. The leakage current may increase because of the increased capacitance to the ground. Consequently, it might affect the protective circuit breaker that is used in the application.

Normally you detect the problem when you press the start button on the frequency converter the first time. Why? The reason is that the capacitors in the filter are only in use, when the frequency converter is generating an output voltage. This means that the leakage current increases when the inverter generates output pulses; and that happens when the start button is activated.

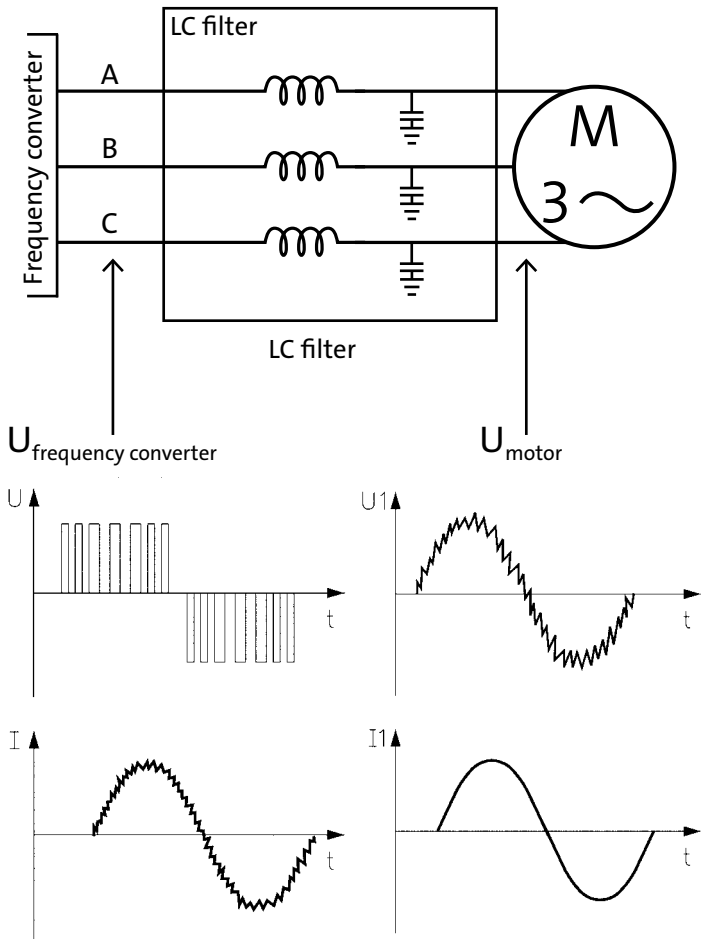

Reasons for overvoltage problems which can cause motor insulation damage due to partial discharges in the motor windings

Output filters for frequency converters

It is important that a protective circuit breaker is installed so that it can handle the increase in leakage current without tripping. The manufactures of LC filters should be able to supply some information about leakage current or supply information about an appropriate protective circuit breaker.

The last thing that we will touch upon when it comes to filters is the installation. Filters should always be installed according to the manufacturer's guidelines. These guidelines include recommendations regarding choice of cable, maximum cable length, limitations regarding maximum ambient temperature, maximum allowable switch frequency, maximum motor current and other issues. To ensure that you obtain the needed performance, it is important that you read and follow the guidelines.

If you are in any doubts about how to handle the output filter for the frequency converter, you should contact the manufacturer of the frequency converter. You will have to supply him with data regarding the motor size or maximum load, maximum allowable dU/dt and U_{peak} and other application related data. The manufacturer will then be able to find a proper solution to your problem.

Bearing currents in relation to operation of frequency converters

In the past few years, there has been a significant increase in motor problems associated with shaft voltages and currents. Voltage discharge from current passing through the bearings can cause the bearings to be damaged or fail if not properly insulated.

Shaft voltages have long been associated with medium and large motors from 250 kW and up; however, the increased use of variable frequency drives has resulted in shaft voltages in much smaller motors: 75 - 250 kW and sometimes even smaller.

In theory the terminal motor voltage supplied by the drive is not balanced or symmetrical in some aspect. Bearing currents in three-phase AC motors are caused by inductive shaft currents from asymmetric stator windings. Normally, they are neglected.

By harmonics, asymmetries in the inverter voltage, incorrect cable length and grounding between inverter and motor, rotor voltages can occur, resulting in current leakage in the motor bearings, also referred to as bearing currents. These bearing currents can cause premature damages and failures, respectively, of bearings and grease. Constant passage of bearing current cause fluting in the outer and inner ring and will accelerate the wear of the bearing with reduced life as a result.

Normally, small motors need to have insulated bearings in both drive-end and non-drive-end or ceramic bearings to cut off the small flow of bearing current. Larger motors, however, have to be fitted with one single insulated bearing or one single ceramic bearing to cut off the large flow of bearing current.

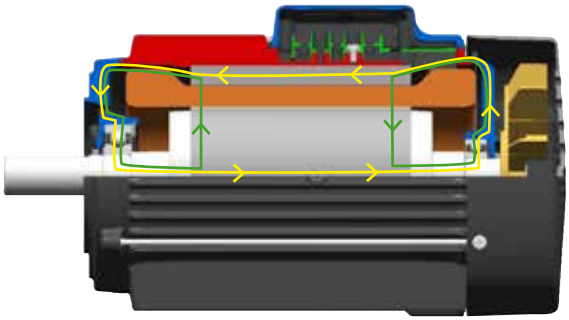

Circulating bearing current as either a large circuit through both bearings or a small circuit through each bearing alone.

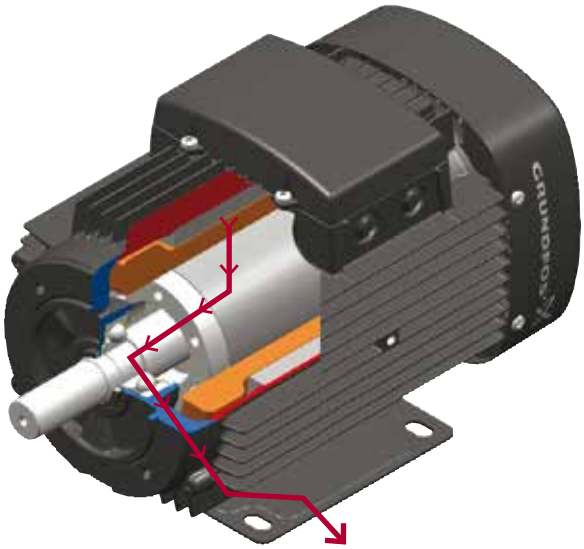

Shaft to ground bearing currents

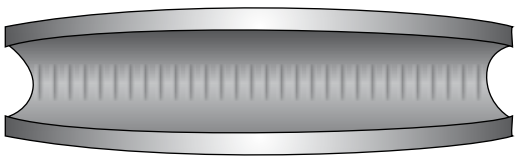

Fluting in the outer ring raceway of a deep-groove ball bearing is caused by the constant passage of bearing current

Specially manufactured bearings

Frequency converters make it possible to control the speed of a motor and adapt the speed to varying loads. These motors can generate stray currents that result in electrical arcing through the bearing and can lead to bearing failure. To prevent this from happening, special coatings made of special materials are used on the rings and balls of the bearings. However applying these coatings is an expensive and time-consuming process.

The latest bearing types in the market make use of the spin-off effect from the aviation industry, where the following three types of bearings are used:

- Hybrid bearings
- Full ceramic bearings
- Ceramic-coated bearings

On the next pages these bearing types will be described more.

Hybrid bearings

The raceways of hybrid bearings are made of steel and the ball bearings are made of ceramic; typically silicon nitrid. Compared to steel bearings, hybrid bearings have the following advantages:

- They can achieve higher speed and greater accuracy
- They have a longer service life

The advantages speak for themselves. Today, hybrid bearings are finding increased usage in a wide variety of engineered applications.

The disadvantage of hybrid bearings is that they are more expensive than standard bearings. Even though hybrid bearings continue to be more and more affordable, they are not always the most economic solution.

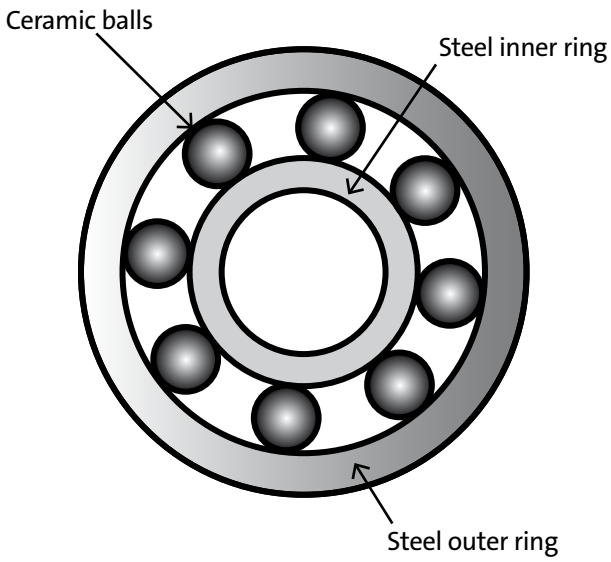

Hydrid bearings

Full ceramic bearings

Full ceramic bearings are as the name implies made entirely of ceramics. These bearings offer the following advantages:

- Special electrical and magnetic resistance
- Resistant to wear and corrosion
- Lubrication and maintenance-free especially in high- and low- temperature applications
- Resistant to aggressive environments

Full ceramic bearings are available in all sizes for small motors.

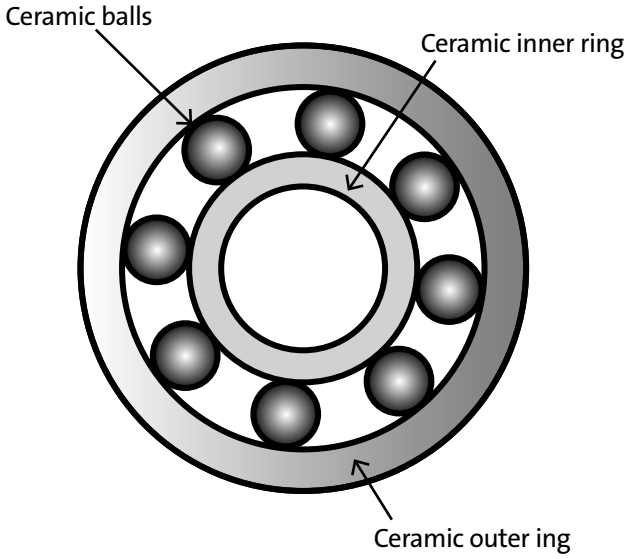

Full ceramic bearings

Insulated bearings
- Ceramic coated bearings

This type of bearings has a ceramic coat on either the outer ring, the inner ring or on both. The balls are made of steel, and so are the inner and the outer ring on the inside. Insulated bearings differ from both hybrid and ceramic bearings as to service life, temperature resistance and rigidity. Insulated bearings are mainly used to avoid bearing breakdown caused by bearing current from the frequency converter.

The insulating coating on the outer ring of the bearing is made of aluminium oxide, which is applied to the bearing by plasma spraying technology. This kind of coating can resist a 1000 V dielectric breakdown voltage.

Electrically-insulated bearings come in many types. Most common bearing types include cylindrical roller bearings and deep groove ball bearings with outside diameters larger than 75 mm – that is bearings larger than 6208.

Like hybrid and ceramic bearings, insulated bearings are more costly than standard bearings though they continue to be more and more affordable. Insulated bearings are used more and more frequently as standard as non-drive-end bearings in frequency-controlled motors with frame size 280 and up.

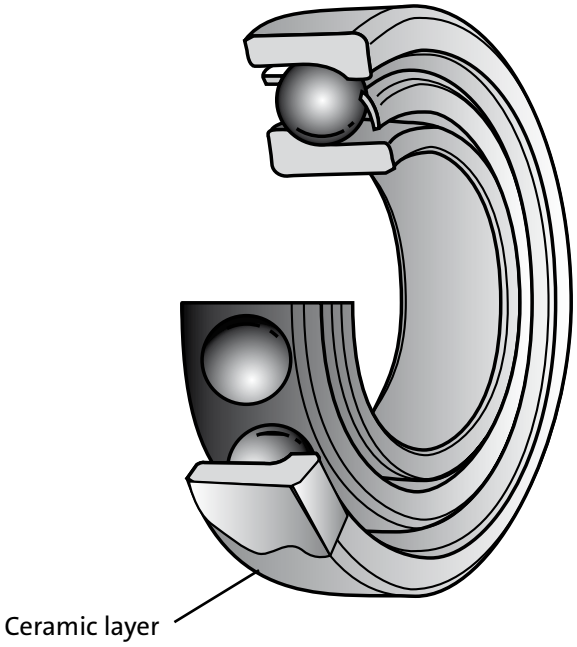

Insulated bearings - ceramic coated bearings

Precautions and frequency converter operation

When we deal with precautions and frequency converter operation, we distinguish between 4 types of motors:

- Motors without phase insulation between the windings and the coil end
- Motors with phase insulation between the windings and the coil end
- Motors with reinforced phase insulation
- Motors with bearing insulation

What follows is a brief presentation of these four motor types.

Motors without phase insulation

For motors constructed according to modern principles, without the use of phase insulation, continuous voltages (RMS) above 460 V will increase the risk of disruptive discharges in the windings and thus destruction of the motor. This applies to all motors constructed according to these principles. Continuous operation with voltage peaks above 650 V will cause damage to the motor. The standard motor, frame size MG 71 and MG 80, up to and including 415 V, 50 Hz, og 440 V, 60 Hz. are constructed without the use of phase insulation.

Motors with phase insulation

In three-phase motors from Grundfos MG, MMG and certain versions of MG 71 and MG 80, phase insulation is used and consequently, specific precautions are not necessary.

Motors with reinforced insulation

In connection with supply voltages between 500 and 690 V, the motor has to have reinforced insulation or be protected with dU/dt filters. For supply voltages of 690 V or more, the motor has to be fitted with reinforced insulation and dU/dt filters.

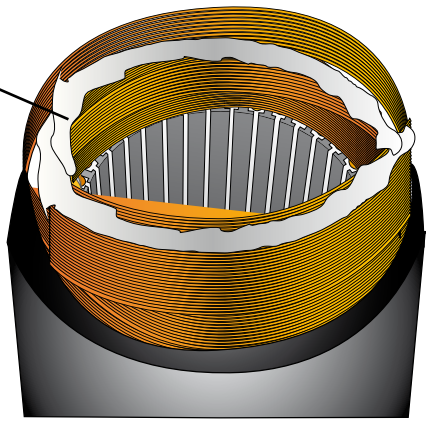

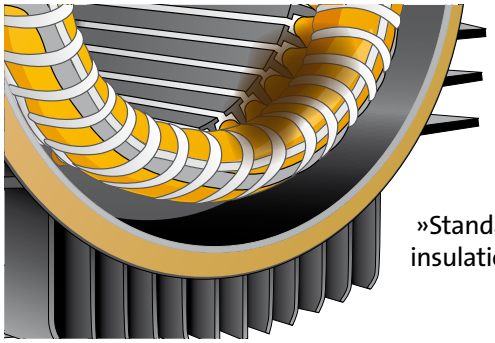

This type of motor damage is likely to occur when a standard motor is operated by a frequency converter and above 500 V

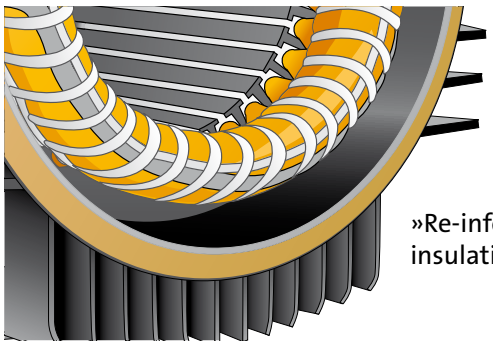

See the difference between »re-inforced« insulation system and the »standard« insulation system

Recommendations

Generally, all the components in a frequency converter based solution have to fit the application. The fuses should have an appropriate size; neither too small nor too big. The protective circuit breaker should be specially designed for use with frequency converters. If an output filter is used, please remember that this could lead to a slightly higher leakage current. The output filter should fit the frequency converter and the frequency converter should fit the actual motor size.

To avoid poor performance and low efficiency, do not use large frequency converters for small motors. Use a filter that fits the converter. If you have any questions about the frequency converter, contact the supplier and let him help you choose the right components for the application. Always follow the installation guide!

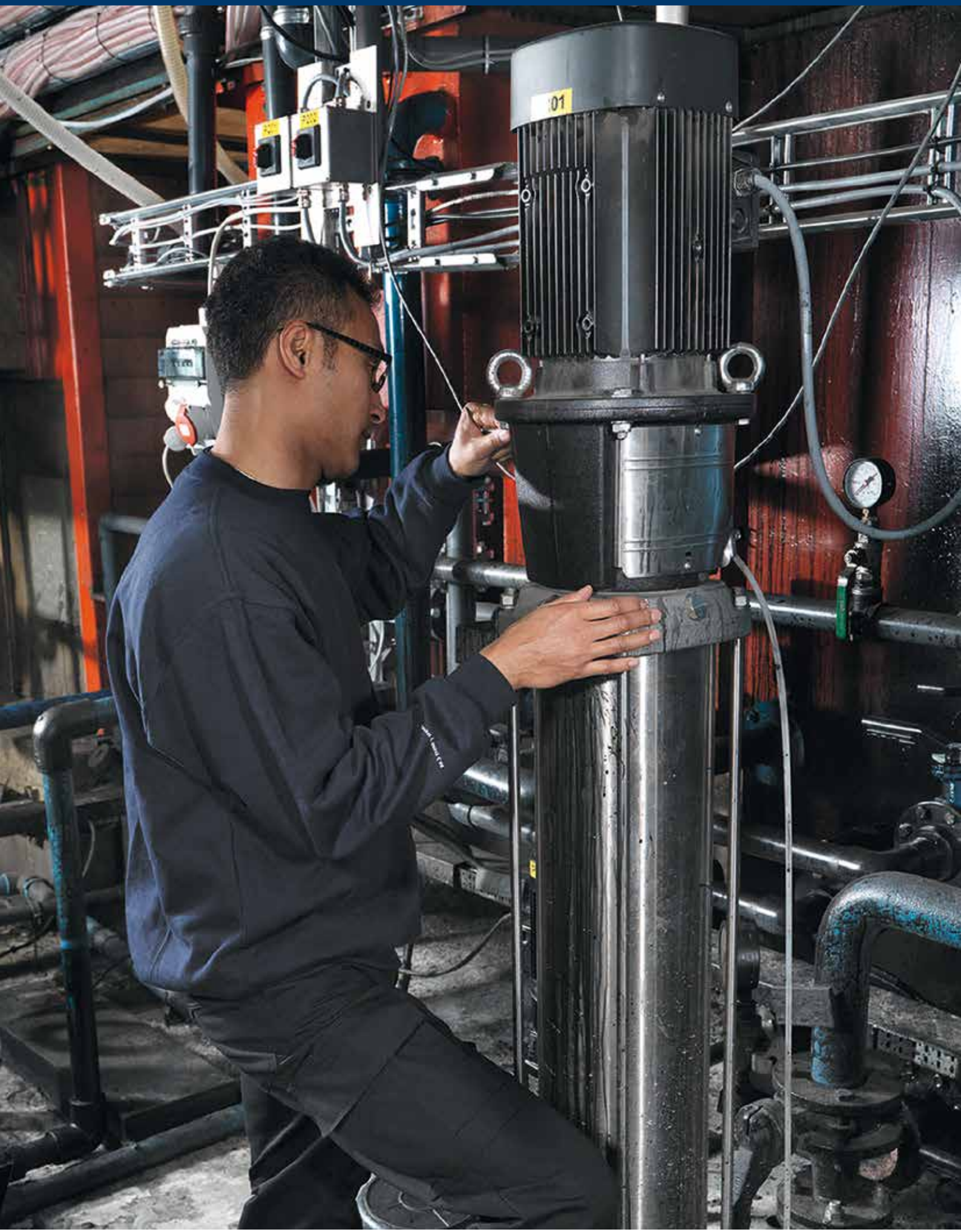
01

9. Installation

What to do upon receipt? ... 178
How to store the motor ... 178
When lifting the motor ... 179
How to read the motor's nameplate ... 179
Electrical input ... 180
Mechanical output ... 181
Performance ... 181
Reliability ... 181
Maximum ambient temperature ... 182
Construction ... 182
How to measure insulation resistance ... 184
Drying the stator windings ... 186
Hot surfaces ... 187
Other factors ... 187
What to notice about bearings and lubrication ... 188
What to know about alignment ... 188
How to ensure correct alignment ... 189
Alignment ... 190
What to know about foundation and vibration dampening ... 192
What to know about ambient temperature and installation height above sea level ... 193
What to know about cooling air ... 195
How to handle air humidity ... 197
What to know about anti-condensation heaters ... 198
Protection against rain and sun ... 198
Drain holes ... 199
What about corrosion ... 199
Normal finish ... 199
Special finish ... 199
What to know about terminals and direction of rotation ... 200
Terminal box ... 201
Connection of the motor ... 202
Voltage and frequency variations during operation ... 203
Voltage and frequency limits for motors ... 203
How to detect voltage and/or current imbalance ... 204
Phase voltage imbalance ... 204
How much imbalance is tolerable? ... 205
What to do if unbalanced voltage/current is present? ... 205
What to know about sound ... 206
What to know about sound measurement on motors ... 207
Sound pressure from several sound sources ... 208
Sound pressure in relation to speed ... 208

What to do upon receipt

It might be obvious to you, but nevertheless, people tend to forget it anyhow. So, when you receive your motor, check it immediately for any external damage and inform your supplier without delay, if you believe the motor is damaged.

You need to check that all the data on the nameplate corresponds to what you have ordered, especially with regards to voltage, winding connection (star or delta) and if it is an Ex motor; category, type of protection and temperature marking. When you are sure that the motor correspond to the motor you ordered, you have to check that nothing prevents the motor from rotating freely. This is done by turning the shaft by hand.

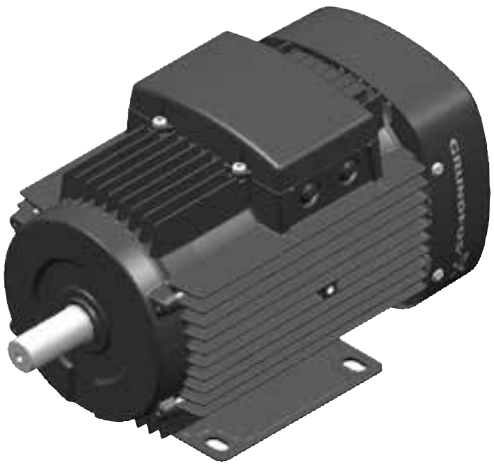

How to store the motor

It is anything but unimportant how you store a motor. Certain guidelines need to be followed depending on the type of motor to protect it.

- Always store the motor indoor in a dry vibration-free place with no dust.
- Unprotected motor parts such as shaft ends and flanges should be protected against corrosion with anti-corrosive oil or grease.
- By rotating the shaft from time to time, you avoid grease migration and static marks on the ball bearings.
- Bearings in motors which are stocked for a longer period of time or have been subject to a longer period of standstill may make abnormal noise when started. Noise occurs because the bearing grease has not been heated up and spread throughout the bearing for some time. In most cases, the noise disappears when the bearing grease is spread throughout the bearing and warmed up.

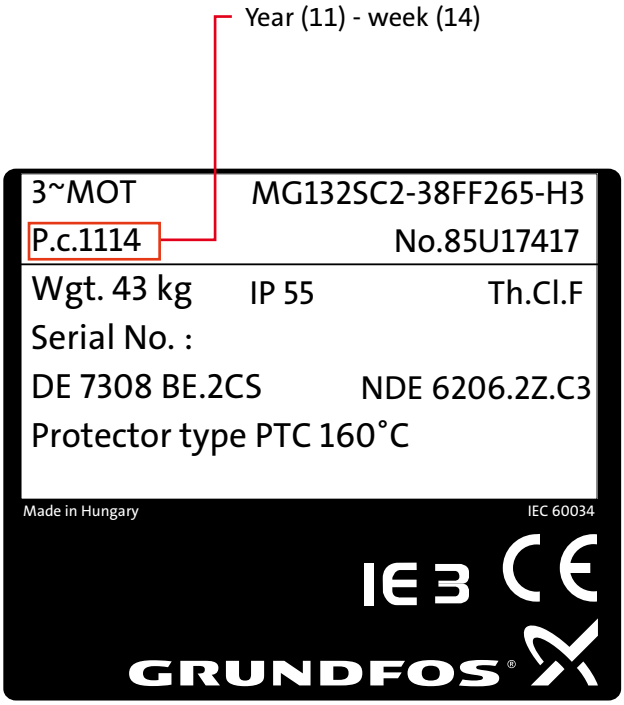

When lifting the motor

In order to avoid damage on the bearings when lifting the motor, keep the following advice in mind:

- Never lift the motor by the shaft.
- Only lift the motor in the eye bolts.
- Check the motor's weight on the nameplate or in the Installation and Operation manual.
- When lifting the motor, always do it gently. so that the bearings are not damaged.
- Eye bolts attached to the stator housing should only be used to lift the motor.

How to read the motor's nameplate

Have you ever wondered what all the information on an AC motor's nameplate means? If yes, then read on! In this section we will give you an overview of the meaning of the different data you find on a motor's nameplate. We have divided the data into 6 main groups: Electrical input, mechanical output, performance, safety, reliability and construction.

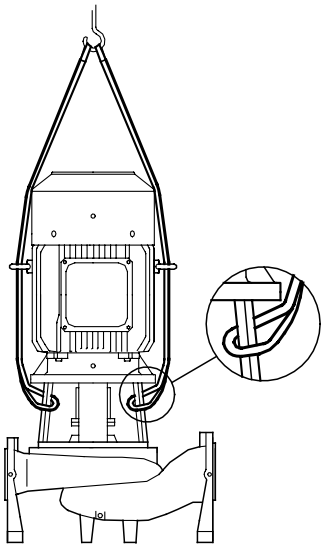

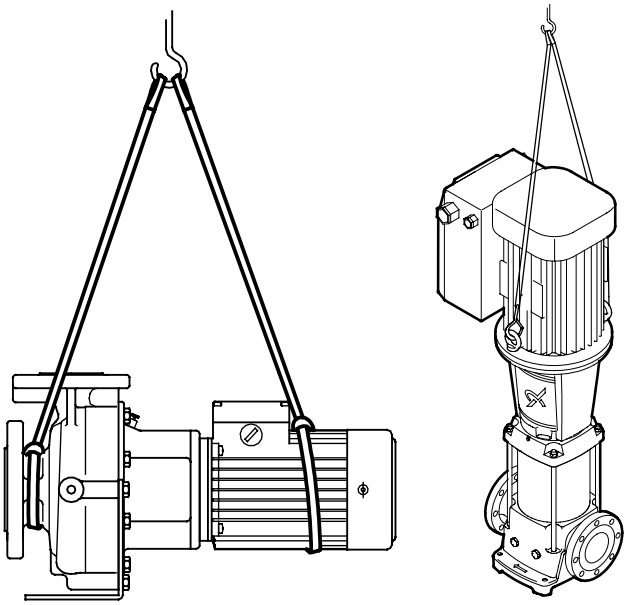

In the installation and operation manual
you can find information about
how to lift the pump unit (pump and motor) correctly

What to do upon receipt

Electrical input

Voltage

This data tells you at which voltage the motor is made to operate. Nameplate-defined parameters for the motor such as power factor, efficiency, torque and current are at rated voltage and frequency. When the motor is used at other voltages than the voltage indicated on the nameplate, its performance will be affected.

Frequency

Usually for motors, the input frequency is 50 or 60 Hz. If more than one frequency is marked on the nameplate, then other parameters that will differ at different input frequencies have to be indicated on the nameplate as well.

Phase

This parameter represents the number of AC power lines that supply the motor. Single-phase and three-phase are considered as the standard.

Current

Current indicated on the nameplate corresponds to the rated power output together with voltage and frequency. Current may deviate from the nameplate amperes if the phases are unbalanced or if the voltage turns out to be lower than indicated.

Type

Some manufacturers use type to define the motor as single-phase or poly-phase, single-phase or multi-speed or by type of construction. Nevertheless, there are no industry standards for type. Grundfos uses the following type designation: MG132SC2-38FF265-H3

Power factor

Power factor is indicated on the nameplate as either "PF" or "P.F" or cos φ. Power factor is an expression of the ratio of active power (W) to apparent power (VA) expressed as a percentage. Numerically expressed, power factor is equal to cosine of the angle of lag of the input current with respect to its voltage. The motor's nameplate provides you with the power factor for the motor at full-load.

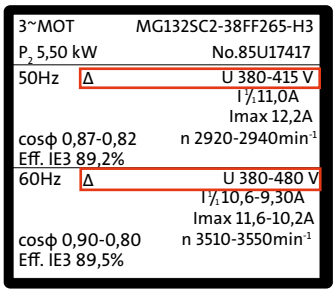

Voltage

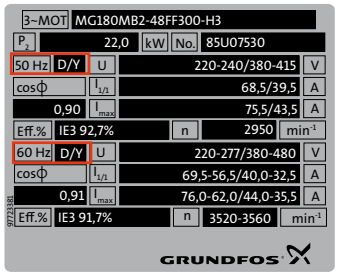

Frequency both 50 Hz and 60 Hz

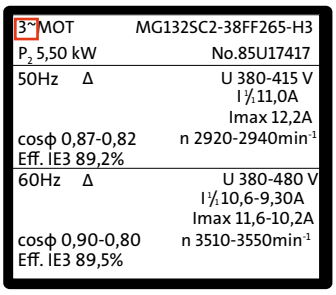

Three-phase

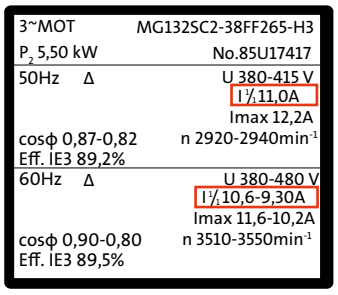

Current

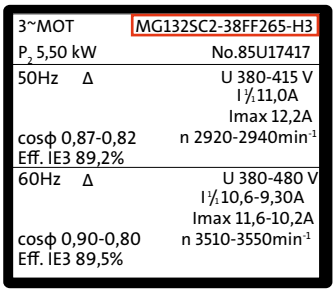

Type designation

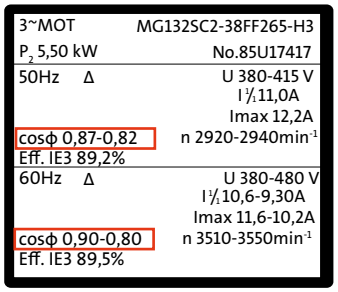

Power factor
also known as cos φ

Mechanical output

kW or horsepower

kW or horsepower (HP) is an expression of the motor's mechanical output rating – that is it's ability to deliver the torque needed for the load at rated speed.

Full-load speed

Full-load speed is the speed at which rated full-load torque is delivered at rated power output. Normally, the full-load speed is given in RPM. This speed is sometimes called slip-speed or actual rotor speed.

Performance

Efficiency

Efficiency is the motor's output power divided by its input power multiplied by 100. Efficiency is expressed as a percentage. Efficiency is guaranteed by the manufacturer to be within a certain tolerance band, which varies depending on the design standard, eg IEC or NEMA. Therefore, pay attention to guaranteed minimum efficiencies, when you evaluate the motor's performance.

Duty

This parameter defines the length of time during which the motor can carry its nameplate rating safely. In many cases, the motor can do it continuously, which is indicated by an S1 or "Cont" on the nameplate. If nothing is indicated on the nameplate, the motor is designed for duty cycle S1.

Reliability

Insulation class

Insulation class (INSUL CLASS) is an expression of the standard classification of the thermal tolerance of the motor winding. Insulation class is a letter designation such as "B" or "F", depending on the winding's ability to survive a given operating temperature for a given life. The farther in the alphabet, the better the performance. For instance, a class "F" insulation has a longer nominal life at a given operating temperature than a class "B".

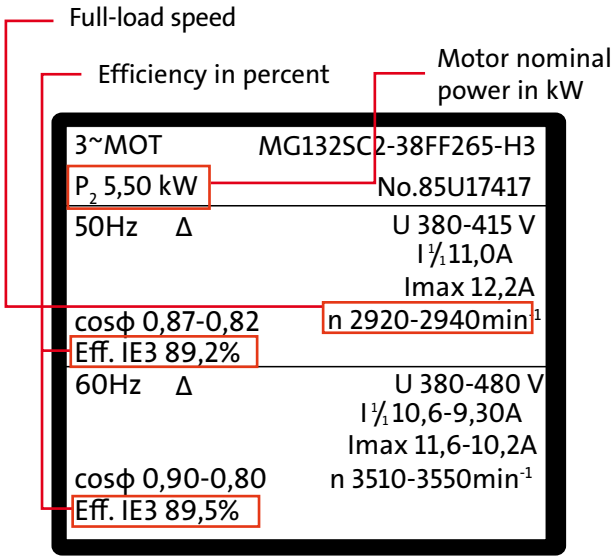

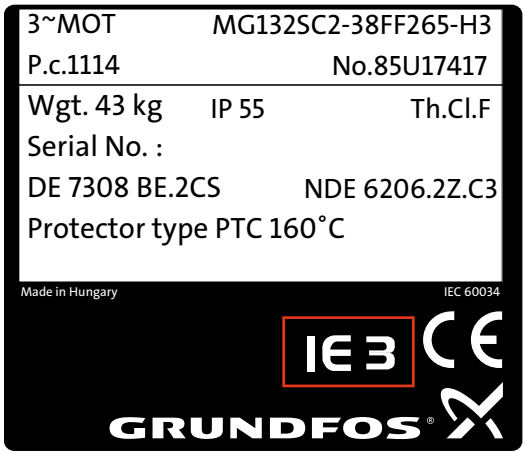

Efficiency label

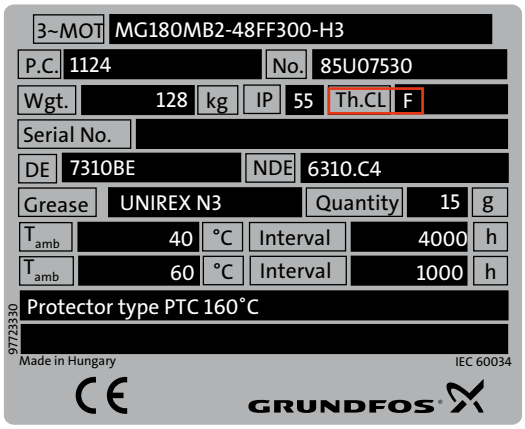

Insulation Class

Maximum ambient temperature

The maximum ambient temperature at which a motor can operate is sometimes indicated on the nameplate.

If not the maximum is 40°C for IE1 motors and normally 60°C for IE3 and IE2 motors. The motor can run and still be within the tolerance of the insulation class at the maximum rated temperature.

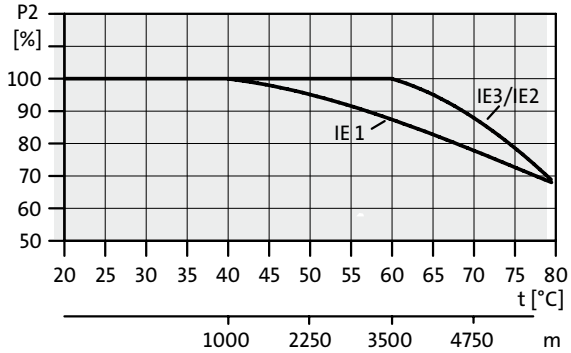

The power output reduction curve shows the performance reduction with increased ambient temperature or increased installation height above sea

Altitude

This indication shows the maximum height above sea level at which the motor will remain within its design temperature rise, meeting all other nameplate data.

If the altitude is not indicated on the nameplate, the maximum height above sea is 1000 metres.

Construction

Enclosure

Enclosure classifies a motor as to its degree of protection from its environment and its method of cooling. Enclosure is shown as IP or ENCL on the nameplate.

Frame

The frame size data on the nameplate is an important piece of information. It determines mounting dimensions such as the foot hole mounting pattern and the shaft height. The frame size is often a part of the type designation which can be difficult to interpret because special shaft or mounting configurations are used.

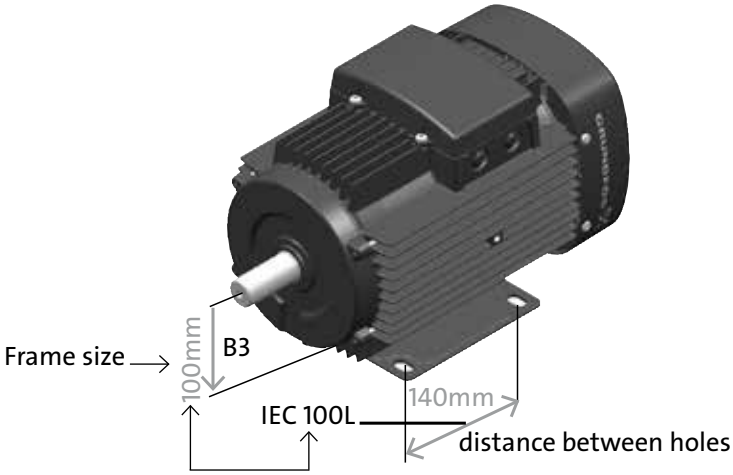

Bearings

Bearings are the component in an AC motor that requires the most maintenance. The information is usually given for both the drive-end (DE) bearing and the bearing opposite the drive-end, non drive-end (NDE).

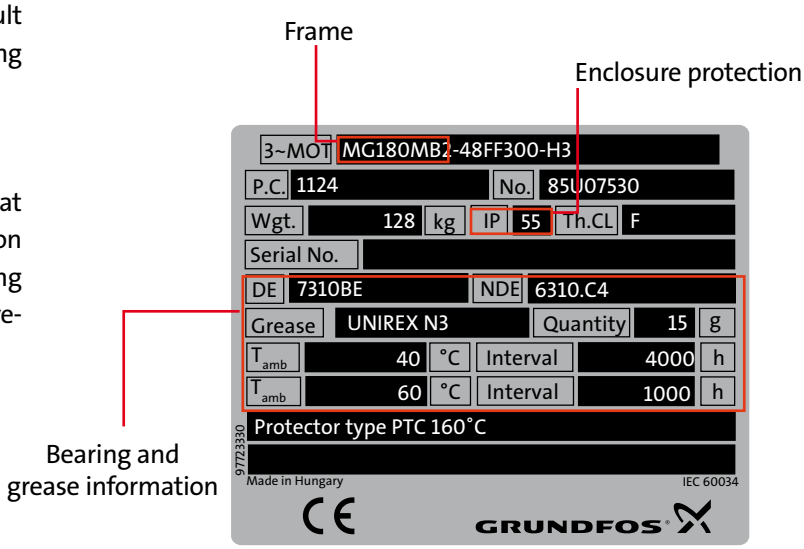

NEMA

Besides the above-mentioned information, NEMA nameplates have some supplementary information. The most important ones are: a letter code, a design letter and a service factor.

Letter code

A letter code defines the locked rotor current kVA on a per horsepower basis. The letter code consists of letters from A to V. The farther away from the letter code A, the higher the inrush current per horsepower.

Design letter

Design letter covers the characteristics of torque and current of the motor. Design letter (A, B, C or D) defines the different categories. Most motors are design A or B motors.

A design A motor torque characteristic is similar to the characteristic of a design B motor; but there is no limit in starting inrush current. With a design B motor, the motor manufacturer has to limit the inrush current on his products to make sure that users can apply their motor starting devices.

So, when replacing a motor in an application, it is important to check the design letter, because some manufacturers assign their products with letters that are not considered industry standard which may lead to starting problems.

Service factor

A motor designed to operate at its nameplate power rating has a service factor of 1.0. This means that the motor can operate at 100% of its rated power. Some applications require a motor that can exceed the rated power. In these cases, a motor with a service factor of 1.15 can be applied to the rated power. A 1.15 service factor motor can be operated at 15% higher than the motor's nameplate power.

However, any motor that operates continuously at a service factor that exceeds 1 will have reduced life expectancy compared to operating it at its rated power.

NEMA code letter	Locked rotor kVA/HP	NEMA code letter	Locked rotor kVA/HP
A	0 - 3.15	L	9.0 - 10.0
B	3.15 - 3.55	M	10.0 - 11.2
C	3.55 - 4.0	N	11.2 - 12.5
D	4.0 - 4.5	O	not used
E	4.5 - 5.0	P	12.5 - 14.0
F	5.0 - 5.6	Q	not used
G	5.6 - 6.3	R	14.0 - 16.0
H	6.3 - 7.1	S	16.0 - 18.0
I	not used	T	18.0 - 20.0
J	7.1 - 8.0	U	20.0 - 22.4
K	8.0 - 9.0	V	22.4 and up

Formula:

$$\text{Three-phase kVA} = \frac{\text{voltage} \cdot \text{starting current} \cdot \sqrt{3}}{1000}$$

$$\text{Single-phase kVA} = \frac{\text{voltage} \cdot \text{starting current}}{1000}$$

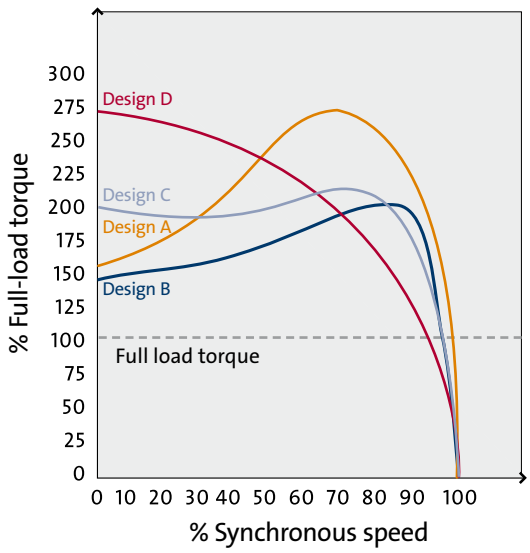

How to measure insulation resistance

If the motor is not put into operation immediately upon arrival, it is important to protect it against external factors like moisture, high temperature and impurities in order to avoid damage to the insulation. Before the motor is put into operation after a long period of storage, you have to measure the winding insulation resistance.

If the motor is kept in a place with high humidity, a periodical inspection is necessary. It is practically impossible to determine rules for the actual minimum insulation resistance value of a motor because resistance varies according to method of construction, condition of insulation material used, rated voltage, size and type. In fact, it takes many years of experience to determine whether a motor is ready for operation or not. A general rule-of-thumb is 10 Megohm or more.

The measurement of insulation resistance is carried out by means of a megohmmeter - high resistance range ohmmeter. This is how the test works: DC voltage of 500 or 1000 V is applied between the windings and the ground of the motor. During the measurement and immediately afterwards, some of the terminals carry dangerous voltages and MUST NOT BE TOUCHED.

Now, three points are worth mentioning in this connection: Insulation resistance, measurement and checking.

Insulation resistance value	Insulation level
2 Megohm or less	Bad
2-5 Megohm	Critical
5-10 Megohm	Abnormal
10-50 Megohm	Good
50-100 Megohm	Very good
100 Megohm or more	Excellent

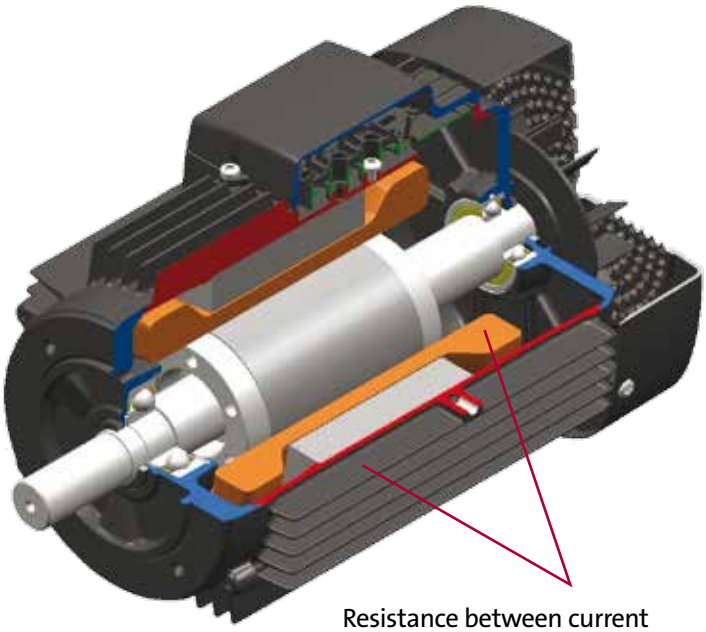

Ground insulation test

Insulation resistance

- The minimum insulation resistance of new, cleaned or repaired windings with respect to ground is 10 Megohm or more.
- The minimum insulation resistance, R, is calculated by multiplying the rated voltage, Un, with the constant factor 0.5 Megohm/kV. For example: If the rated voltage is 690 V = 0.69 kV, the minimum insulation resistance is: 0.69 kV x 0.5 Megohm/kV=0.35 Megohm

Measurement

- Minimum insulation resistance of the winding to ground is measured with 500 V DC. The winding temperature should be 25°C +/- 15°C.
- Maximum insulation resistance should be measured with 500 V DC with the windings at a operating temperature of 80-120°C depending on the motor type and efficiency.

Checking

- If the insulation resistance of a new, cleaned or repaired motor that has been stored for some time is less then 10 Mohm, the reason might be that the windings are humid and need to be dried.
- If the motor has been operating for a long period of time, the minimum insulation resistance may drop to a critical level. As long as the measured value does not fall below the calculated value of minimum insulation resistance, the motor can continue to run. However, if it drops below this limit, the motor has to be stopped immediately, in order to avoid that people get hurt due to the high leakage voltage.

Drying the stator windings

When the insulation resistance value is not attained, the winding is too damp and need to be dried. The drying process is a very delicate one. Excessive temperature as well as too quick temperature increase can generate steam, which damages the windings. Therefore, the rate of temperature increase must not exceed 5°C/h and the winding should not be heated up to more than 150°C for class F motors.

During the drying process, the temperature has to be controlled carefully and the insulation resistance should be measured regularly. But how will the winding react to the temperature increase. Well, in the beginning the insulation resistance will decrease because the temperature increases, but during the drying process, it will increase. No rule-of-thumb exists as to the duration of the drying process; it must be carried on until successive measurements of the insulation resistance are constant and higher than the minimum value. However, if the resistance is still too low after the drying process, it is due to an fault in the insulation system, and the motor has to be replaced.

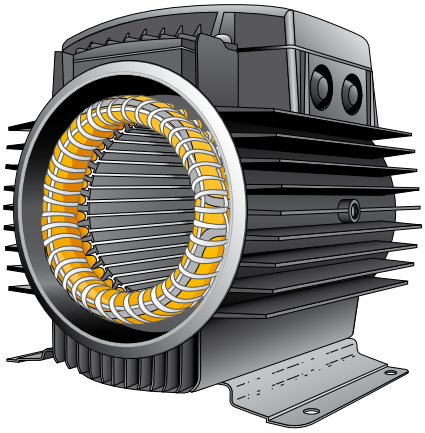

Stator in housing ready for drying

Hot surfaces

Depending on the operation conditions, the motor casing temperature may well exceed 70°C. Therefore, if the stator housing is accessible during operation, it is important to indicate it clearly by attaching a label like the one shown to your right.

For ordinary motors, Grundfos only specifies the insulation class according to the IEC 60085. MG/MMG/MGE motors are classified as class F motors, (they can handle temperatures up to 155°C). But actually, these motors have a temperature rise corresponding to the one of class B motors – that is up to 80°C. In a so to speak worst-case scenario, this implies that the windings reach a temperature rise of 80°C in areas with an ambient temperature of 40°C; the motor reaches a temperature of 120°C.

The temperature of the stator housing rises as well, but not as much as the internal temperature because of cooling. Let us have a look at en example: A 7.5 kW Grundfos IE3 motor runs in an area with ambient temperature of 40°C and at 100% speed and load. Depending on where on the stator housing you carry out the measurement, the temperature will be within the range of 60°C to 90°C; the hottest spots being the drive-end at the flanges and the bottom of the stator housing-ribs.

The only legislation concerning hot surfaces is the ATEX directive 99/4/EC. According to this directive, the local authorities are the ones to determine whether or not the motor can be installed in areas with the risk of an explosive atmosphere, i.e. containing gas and vapours or in areas with the risk of combustible dust.

Other factors

Insulation life is affected by many factors aside from temperature. Moisture, chemicals, oil, vibration, fungus growth, abrasive particles, and mechanical abrasion created by frequent starts, all work to shorten insulation life. In some applications - if the operating environment and motor load conditions can be properly defined- suitable means of winding protection can be provided to obtain reasonable motor life in spite of external disturbing factors.

CAUTION:

Surface temperature of motor enclosure may reach temperatures which can cause discomfort or injury to personnel accidentally coming into contact with hot surfaces. (When installing the motor, protection should be provided by user to protect against accidental contact with hot surface).

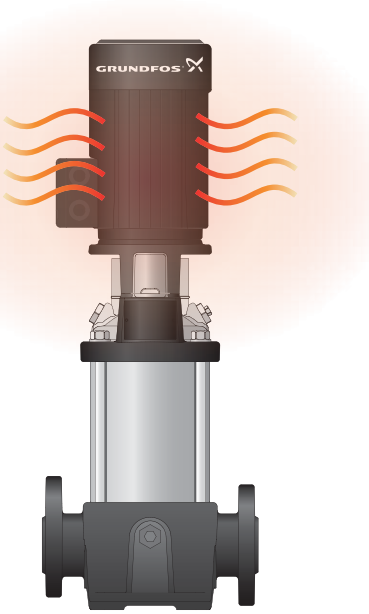

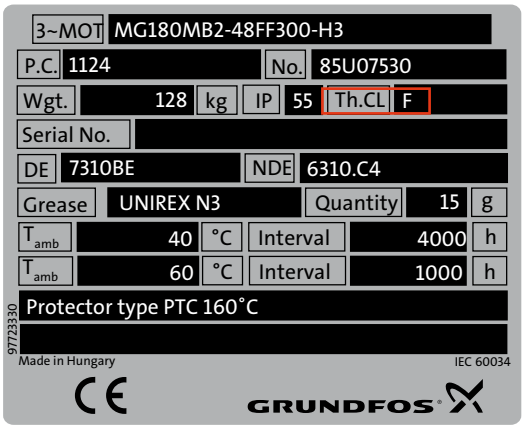

Class	Insulation hot spot	Typical surface	Typical bearing
	Temp. (°C)	Temp. (°C)	Temp. (°C)
B	130	60-90	60-90
F	155	80-120	70-120

Typical absolute temperatures which can be measured for the most common insulation classes. Though Grundfos motors are class F motors, they only have class B temperature rise. Therefore, class B temperatures listed in the table are used.

What to notice about bearings and lubrication

When you install the motor, it is important that you notice the interval for regreasing of the bearings. Typically, the regreasing information is listed on a separate label placed on the fan cover or directly on the motor's nameplate.

All standard motors on Grundfos pumps with a frame size of 160 or more come with lubricated bearings that can be regreased. Motors with a frame size lower than 160 come with greased-for-life bearings, and thus, cannot be regreased.

What to know about alignment

When a complete unit is supplied assembled from the factory, the coupling halves have been accurately aligned by means of foil inserted under the pump and motor mounting surfaces.

However, the pump and motor alignment may be affected during transport because of radial or angular shifting, and must always be checked in connection with the installation.

If it is necessary to correct the alignment, it can be done by aligning fitting shims or removing them under the feet of the pump or the motor.

Make sure that the alignment is made properly. A correct alignment of motor and pump will increase the working lives of coupling, shaft bearings and shaft seals considerably.

Check the final alignment when the pump has obtained its operating temperature under normal operating conditions.

Dansk Smøreinstruktion	English Lubrication instructions	Deutsch Schmieranweisung	Français Instructions de graissage	Espanol Instrucciones de engrase
Fedt Castrol LMX eller tilsvarende høj-temperaturfedt på lithiumbasis.	Grease Castrol LMX or similar high-temperature lithium-based grease.	Fett: Castrol LMX oder entsprechendes lithiumbasiertes Hochtemperaturfett.	Graisse Castrol LMX ou graisse semblable haute température et à base de lithium.	Grasa Castrol LMX u otra grasa de alta temperatura a base de litio.
Vigtigt!! -Såfremt andet fedt anvendes, bør blandbarheden undersøges.	Important!! -If another brand of grease is used, check its mixability.	Wichtig!! -Falls anderes Fett benutzt wird, muss die Mischbarkeit untersucht werden.	Important!! -Si une autre marque de graisse est utilisée, rechercher sa miscibilité.	Importante!! -En el caso de usar otra marca de grasa debe checarse su mezclabilidad
-Overhold smørein-tervaller og fedtmængder. Smøring skal foretages med motoren i drift.	-Observe lubrication intervals and grease quantities. -The motor should be lubricated when operating.	-Schmierintervalle und Fettmengen beachten. -Nachschmierung muss bei Motor in Betrieb vorgenommen werden.	-Observer intervalles et quantités de graissage. -Lubrifier le moteur lorsqu'il est en marche.	-Respetar intervalos y cantidades de engrase. -El engrase debe realizarse con el motor en marcha.
-Standses motoren for en længere periode (sæsondrift): Smør før standsning.	-The motor should be lubricated before it is stopped for a long period (seasonal operation).	-Wird der Motor über einen längeren Zeitraum abgestellt (Saisonbetrieb): Nachschmieren vor der Stillstandsperiode.	-Lubrifier le moteur avant un arret de longue durée (marche saisonnière).	-Si el motor queda fuera de servicio durante un periodo prolongado debe engrasarse antes de pararse.
-Ved lejeskifte: Fedtmængde til opfyldning af nye lejer: A=60g B=30g	-When replacing bearings: Quantity of grease for filling up new bearings: A=60g B=30g	-Bei Lagertausch: Fettmenge zum Auffüllen der neuen Lager: A=60g B=30g	-Remplacement des paliers: Quantité de graisse pour le remplissage des nouveaux paliers: A=60g B=30g	-Reemplazo de los cojinetes: Cantidad de grasa para el relleno de los nuevos cojinetes: A=60g B=30g

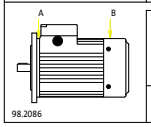

Smøreinterval Lubrication interv Schmierintervall Int. de graissage Intervaldo de engrase	Fedtmængde Grease quantity Fettmenge Quantité de graisse Cantidad de grasa
4000 h	10 g

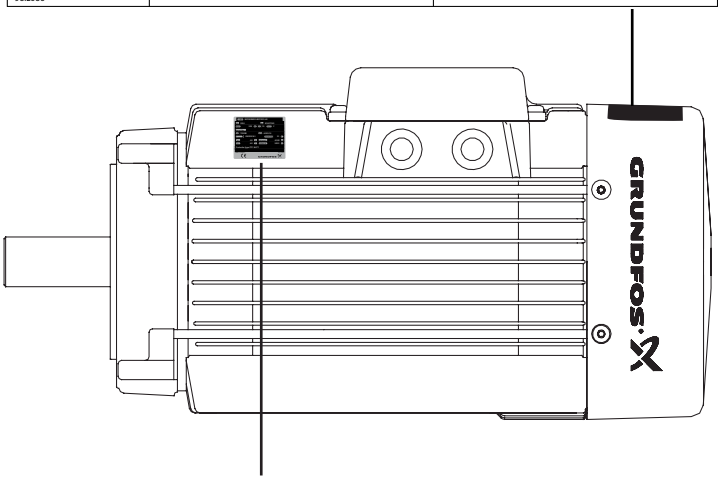

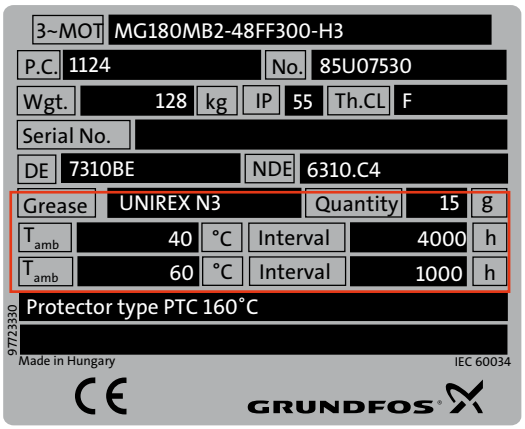

Typically, the regreasing information is listed on a separate label placed on the fan cover or directly on the motor's nameplate

How to ensure correct alignment

The best way to ensure correct alignment is to use a dial indicator placed on each coupling half, one reading radially and the other axially. In this way simultaneous readings can be informed and one can check any deviation in parallelism or concentricity by rotating the shaft. The dial indicator should not exceed +/- 0.1 mm. If the operator is sufficiently skilled, he can obtain alignment with a clearance gauge and a steel ruler, providing that the couplings are perfect and centred.

A measurement at 4 different points of the circumference should not give a reading difference larger than 0.03 mm to avoid angular gap.

When alignment/levelling it is important to take into consideration the effect of the temperature rise of the motor and driven machine. The different expansion levels of the coupled machines can modify the alignment/levelling during motor operation. After the set (motor and base) has been perfectly aligned, the motor must be bolted. There are instruments that use visible laser ray that can perform and ensure high precision alignment.

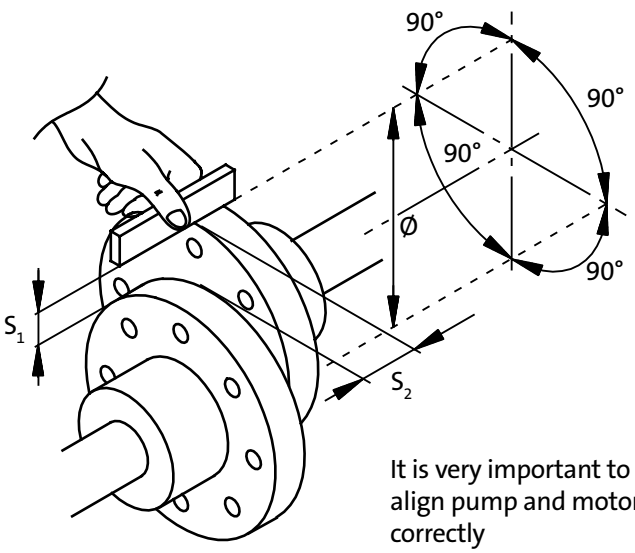

It is very important to align pump and motor correctly

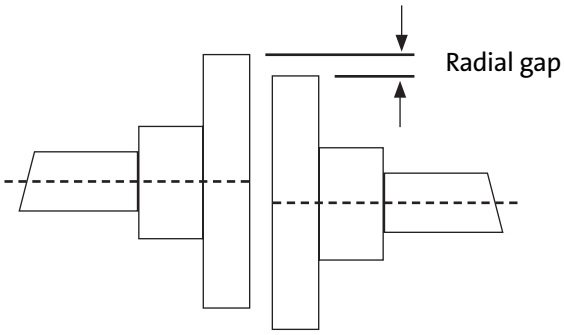

Radial alignment (concentricity) S_1

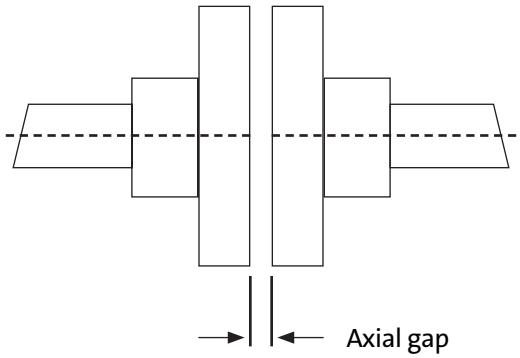

Axial alignment S_2

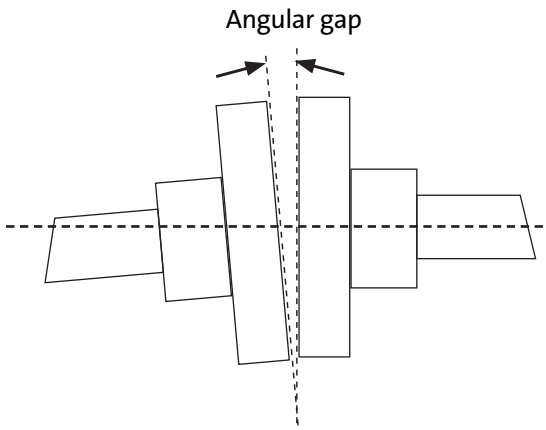

Angular alignment (parallelism)

Alignment

Step 1
The distance between the shaft ends must correspond to the value S2 from the pump documentation. Displace the shaft keys 180 degrees.

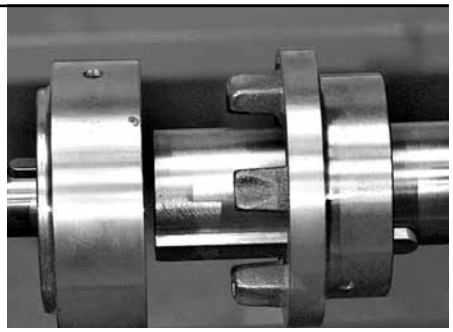

Step 2
Check the alignment.

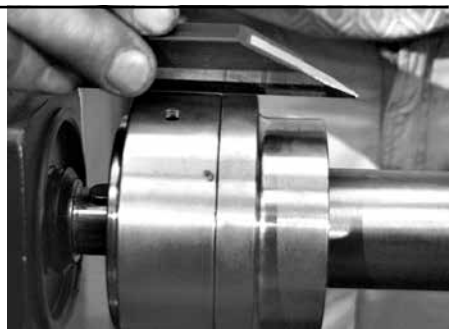

Step 3
Repeat the alignment check, 90 degrees displaced.

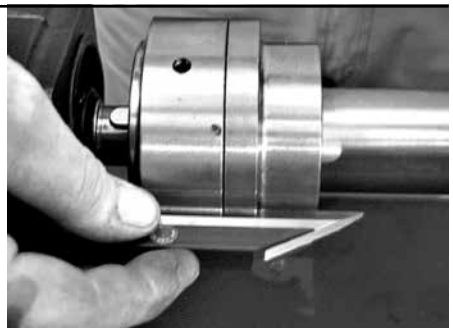

Step 4
Tighten the screws holding the pump and the motor to the base plate.

Step 5
Check the alignment. The tolerance for S_1 is +/- 0.1 mm. If the alignment is OK, go to step 10.

Step 6
Cut out the foil in adequate size.

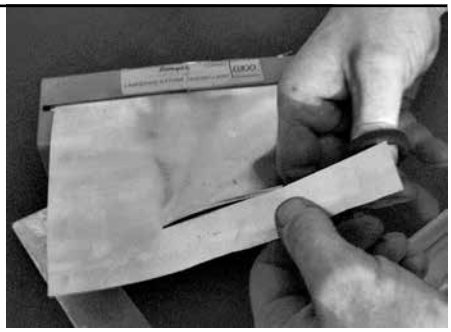

Step 7
Place the foil where needed.

Step 8
Retighten the screws.

Step 9
Check the alignment carefully once more.

Step 10
The air-gap width S_2 must correspond to the value stated in the pump documentation.
The tolerance is +/- 0.1 mm.

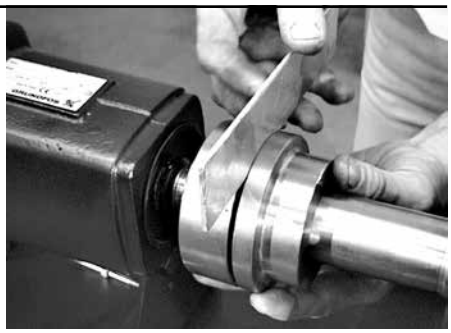

What to know about foundation and vibration dampening

In order to achieve optimum operation and to reduce noise and vibration to a minimum, it may be necessary to consider vibration dampening of the pump in certain cases. Generally, this should always be considered in the case of pumps with motors larger than 7.5 kW. Smaller motors, however, may also cause undesirable noise and vibration.

Noise and vibration are generated by the rotation in motor and pump and by the flow in pipes and fittings. The effect on the environment is subjective and depends on correct installation and the state of the remaining system.

The pump must be attached to a plane and rigid foundation. A concrete foundation of plinth would be an optimum solution.

As a rule-of-thumb, the weight of a concrete foundation should be 1.5 x pump weight for vibration dampening. The foundation should be 100 mm larger than the base plate on all four sides.

To avoid that vibrations are transferred to the building or to the pipework it is recommended to install correctly calculated vibration dampeners and expansion joints.

The selection of vibration damper differs from instal-lation to installation. A wrong dampener may in certain cases increase the vibration level. The supplier should therefore size vibration dampeners.

If the pump is installed on a foundation with vibration dampeners, expansion joints must be fitted on both sides of the pump. This is very important to ensure that the pump is not hanging from the flanges.

If motors with keyway are used for pumps with a smooth shaft coupling, for example a Grundfos CR pump, the keyway MUST be filled with a half key. Otherwise, the vibration level will exceed the recommended level and consequently this will decrease the lifespan of bearings and shaft seal.

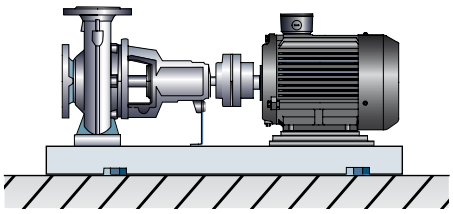

Floor – direct mounting on floor, hence direct vibration transmission

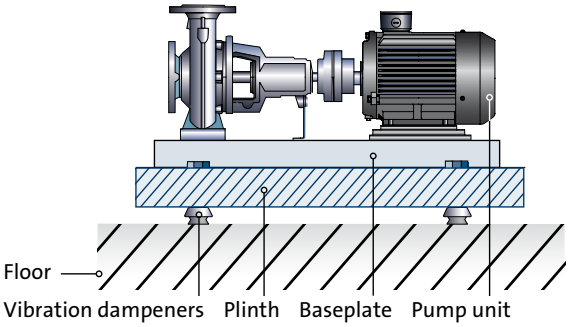

Plinth – cast directly on concrete floor, hence as floor

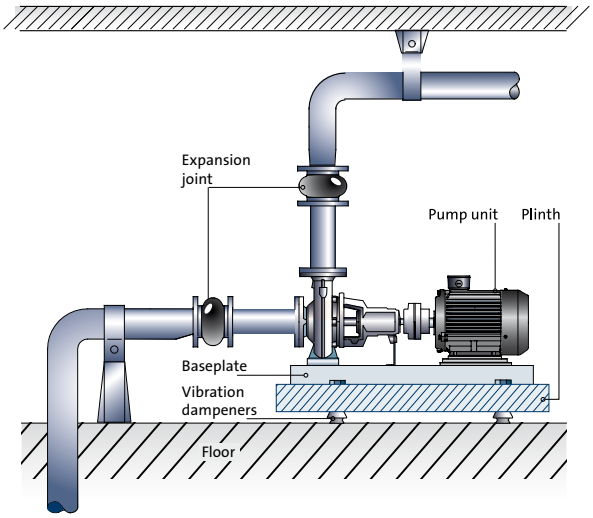

What to know about ambient temperature and installation height above sea level

The ambient temperature and the installation height above sea level are important factors to consider when you install a motor. In fact, both factors have a great impact on the lifespan of the bearings and the insulation system.

Now, what follows is a brief description of what you need to know about the ambient temperature when you install a motor.

- A motor which is designed according to the IEC 60034-1 standard must meet the demands as to insulation class at ambient temperature range from -15°C to +40°C.
- If the motor's operation conditions change and exceed the -15°C to +40°C interval, the motor's output has to be reduced consequently. In connection with IE3 and IE2 motors, an ambient temperature of 60°C is acceptable at nominal output.
- If a motor runs at an ambient temperature exceeding 40°C, it can result in a shorter lifespan of the grease of the bearings and the bearings may need to be replaced or regreased more often.

As to the installation level above the sea, you need to be aware of the following points:

- IE3 and IE2 motors can run at 100% load when they are installed at up to 3500 m above sea level.
- When a IE3 or IE2 motor is installed in more than 3500 m above sea level, it is necessary to reduce the motor's nominal load because the air's density is lower and therefore liberates less cooling. This calls for an example, see the illustration on your right hand side.

If the motor is an IE3 motor the load must be reduced to 88% when it is installed at 4750 m above sea level.

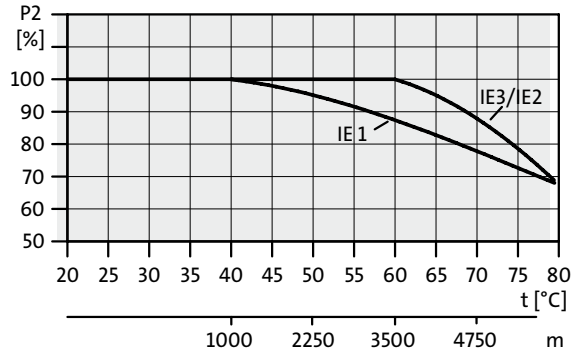

The derating curve shows the motor's decrease in load in higher ambient temperatures and in installations above sea level

What to know about ambient temperature and installation height above sea level

A key ingredient in motor life is the strenght of the insulation system. Aside from vibration, moisture, chemicals, and other non-temperature related life-shortening items, the key to insulation and motor life is the maximum temperature that the insulation system experiences and the temperature capabilities of the system components.

As a rule-of-thumb, insulation life will be doubled for every 10 degrees of unused insulation temperature capability. For example: if a motor is designed to have a total temperature of 120°C (including ambient temperature rise and hot spot allowance) equal to class B, and is built with a class F (155°C) insulation system, an unused capacity of 35°C would exist. This extra margin would raise the expected motor insulation life from 50.000 hours to 400.000 hours.

IE3 and IE2 motors are designed to deal with ambient temperatures up to 60°C. Because of their higher efficiency, these motors have a lower operation temperature.

If a motor is not loaded to full capacity, its temperature rise will be lower. This automatically makes the total temperature lower and extends motor's life expectancy. Also, if the IE3 motor is operated in ambient temperatures lower than 60°C, the motor life expectancy will increase. The same ten-degree rule also applies to motors operating at above rated temperature. In this case, insulation life is "halved" for each 10°C of overtemperature. Often, this is the case for bearings too.

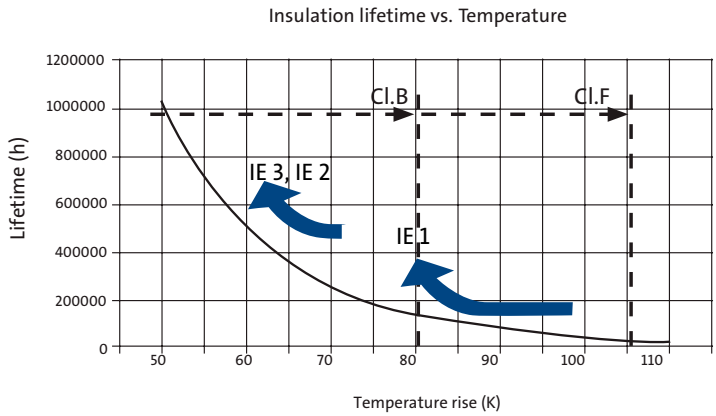

A reduction of 10 K doubles the service life of the insulating system. IE3 and IE2 motors typically have a temperature rise between 50-70 K. This entails a longer insulation system service life than for IE1 motors.

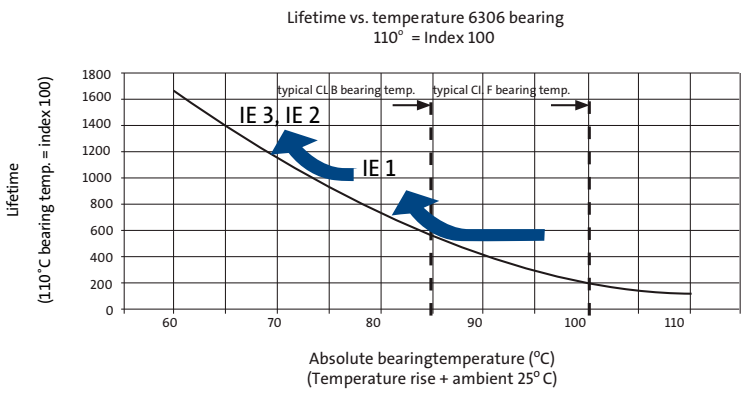

A bearing at 110°C has a life time equivalent to index 100. The calculation shows that the life time of a bearing increases extreemly when the bearing temperature decreases. Nearly the same function as the lifetime of the insulation system.

What to know about cooling air

The motor is cooled externally by means of a shaft-mounted fan in accordance with the IEC 60034-6, IC 0141 standards. To ensure cooling of the motor, three things can be done:

- Place the motor in such a way that sufficient cooling is ensured.
- Make sure that the temperature of the cooling air does not exceed 40°C.
- Keep the cooling fins, holes in the fan cover and fan blades clean.

When a pump is installed near a wall, it is important to ensure that the correct amount of cooling air can pass through the gap between the fan cover and the wall. If this distance is too short, the amount of cooling air will decrease and the motor will operate at higher temperature, which will decrease the lifetime of the motor.

Often, the motor is wrapped up in a shield, which can be more or less closed, in order to keep the noise down. Consequently, the motor heats up the air inside the shield.

Therefore, it is important that external air can penetrate the shield and thereby cool the motor. Otherwise, the motor slowly warms up its surroundings until it is stopped by the built-in thermal protection device.

Some motor manufacturers tell how much air it takes to cool a given motor size. However, if this is not the case, have a look at the illustration on your right-hand side. The illustration functions as a rough guideline for the amount of air necessary to cool the motor.

The loss in the motor is converted into heat. Thus, by using the efficiency of the motor, it is possible to determine how much heat the motor liberates.

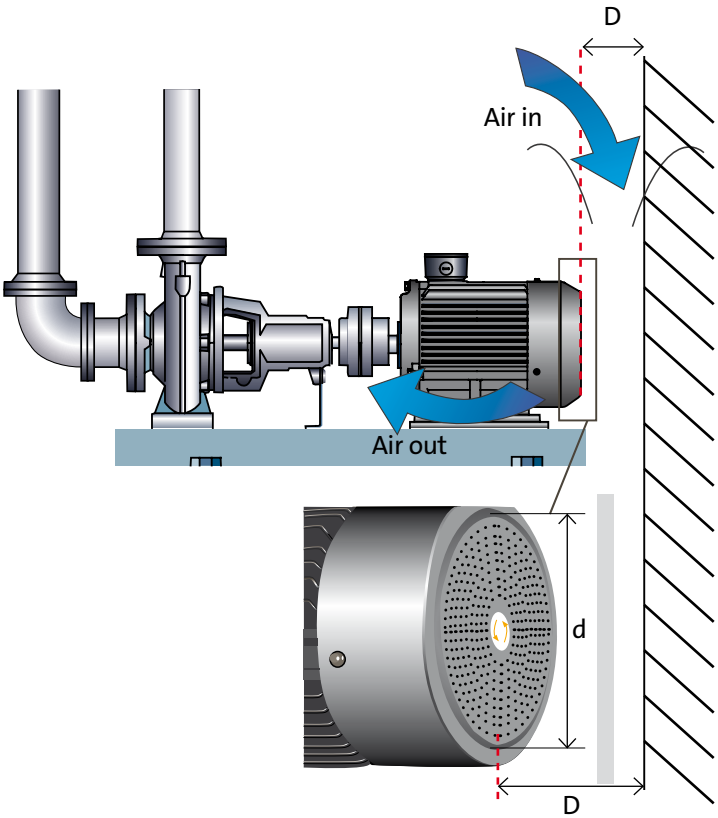

4 free sides = > D = d/4	D = distance to wall
3 free sides = > D = d/3	d = diameter of air inlet in fan cover
2 free sides = > D = d/2	1. Fan cover inlet area = $\frac{d^2 \cdot \pi}{4}$
1 free side = > D = d	
⚠ minimum 50 mm!	2. Pratical inlet area = $D \cdot d \cdot \pi$

$$\Delta T = T_{room} - T_{ambient}$$

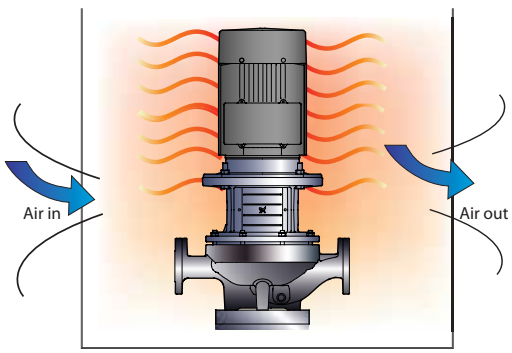

The loss in the motor is converted into heat, which sooner or later will heat up the room or box. New cooler air need to be blown into the room or the box to prevent the temperature from exceeding 40°C.

What to know about cooling air

In order to calculate the needed air flow in the room where the motor and the pump is installed, we use the following formula:

$$G = \frac{3600 \cdot Q}{(C_p \times \Delta T \times P)} = \text{minimum air flow in } m^3/\text{hour}$$

Q = Amount of energy to be removed
= loss in motor (W)

C_p = Heat capacity constant for air
= 1004.3 (joule/kg*K)

P = Density of air (kg/m³)

ΔT = Difference between inlet air and room/box temperature

Let us have a look at a motor with the following data:
- 4 kW Grundfos MG motor
- Motor efficiency 86%

The motor is installed in a room and gives off the following amount of heat (kW) at full-load:

$$Q = P1 - P2 = \text{motor power} \cdot \left(\frac{1}{\eta} - 1\right)$$

$$Q = 4{,}0\text{kW} \cdot \left(\frac{1}{0.86} - 1\right) = 0.7 \text{ kW} = 700 \text{ W}$$

The ambient temperature in the room has to be below 40°C. The outdoor temperature is measured to be 20°C, thus a difference in temperature of 20K (ΔT). Now it is possible to calculate how much air it takes to cool down the room:

$$G = \frac{3600 \cdot 700 \text{ W}}{(1004.3 \cdot 20 \cdot 1.251)} = 93 \text{ m}^3/\text{hour}$$

93 m³ cooling air with a temperature difference at 20 Kelvin is needed per hour to keep the room temperature below 40°C.

This information is used to dimension the ventilation system.

Δ Temperature between room and ambient = 20K

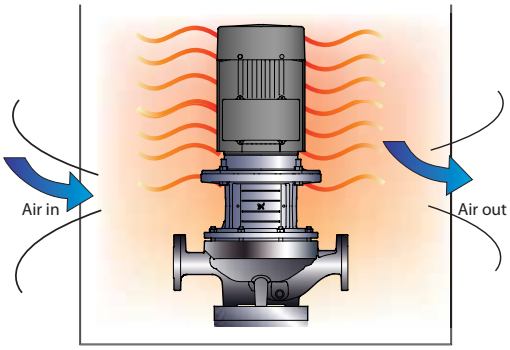

The ambient temperature in the room has to be below 40°C. The outdoor temperature is measured to be 20°C, thus a difference in temperature of 20K (ΔT).

Needed air flow for a 4 kW motor

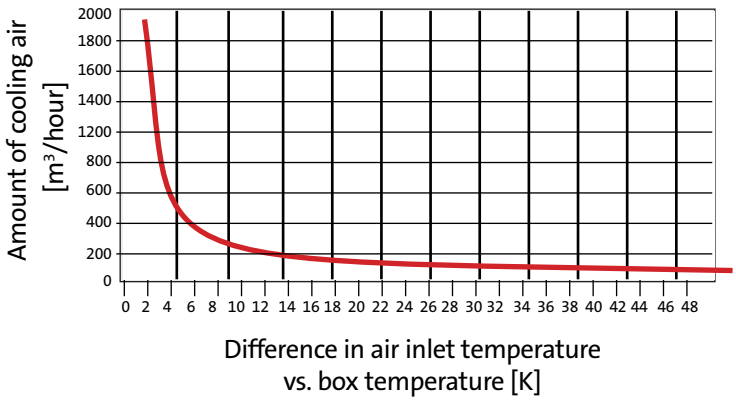

The graph covers 4 kW motors with an efficiency rate of 86% When the cooling air is “cold” the required amount of inlet cooling air is small. When the cooling air is “warm”and very close to 40°C, a large amount of inlet cooling air is necessary.

How to handle air humidity

If a motor is installed in an area with high air humidity, water condensation will appear inside the motor. We distinguish between two kinds of condensation: slow and quick condensation. Slow condensation is a result of a low night temperature and quick condensation is a result of shock cooling because of exposure to direct sunlight followed by rainfall.

Grundfos MG and MMG motors are IP55 protected and can normally operate in areas with a constant humidity of 85% relative humidity at 25°C. For a shorter period of time these motors can operate in areas with air humidity of 95% rel. humidity at 40° C. If the air humidity is constantly high and above 85% rel. humidity, the drain hole in the drive end flange has to be open. With an open drain hole, the motor enclosure class changes from IP55 to IP44.

However, if the enclosure class of the motor has to remain IP55 because it is installed in a dusty environment, an anti-condensation heater has to be mounted on the stator coil head. In this way the temperature of the motor is kept constant during night and no condensation occurs when the motor is not running.

If the air humidity is 95-100% relative humidity and the ambient temperature is above 25°C, the motor has to have reinforced tropical winding insulation.

If insects etc. are present, the winding insulation has to be made of special tropical insulation and insect poison is also added.

Tropical protected motors are not a part of the Grundfos motor program. However, Grundfos co-orporate with motor manufactures who are able to supply these variants.

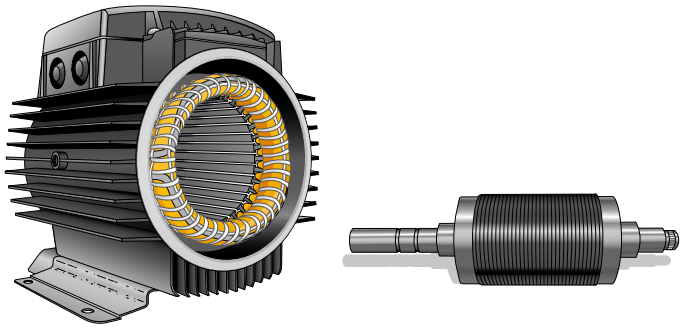

Standard insulation system

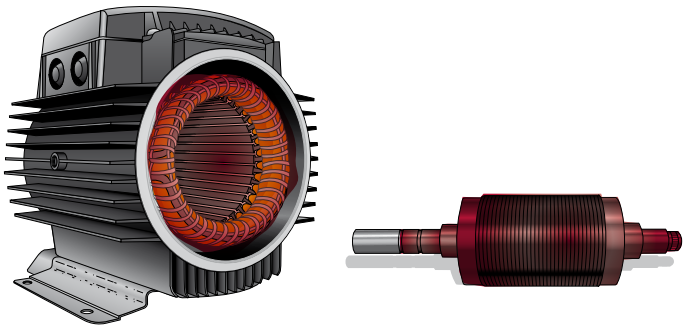

Tropical protected insulation system

- extra and special varnish
- special materials which insects do not eat
- insect poison

What to know about anti-condensation heaters

Some motors are fitted with anti-condensation heaters to avoid water condensation during long periods of time. The anti-condensation heaters are connected so that they are energised immediately after the motor is switched off and are reenergised immediately when the motor is switched on again.

On the motor's nameplate or in the terminal box you can find information about the supply voltage and the characteristics of the anti-condensation heaters used in the motor.

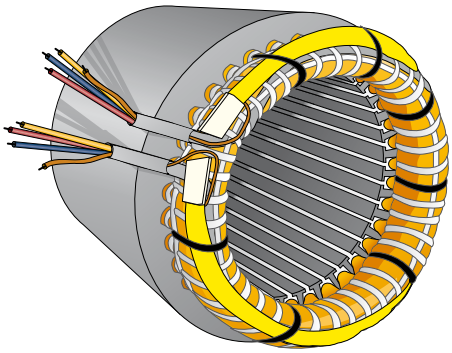

Stator equipped with anti-condensation heaters to prevent condensation problems

Protection against rain and sun

If the motor is installed outdoors, it has to be provided with a suitable cover to avoid condensation and to prevent rain from entering.

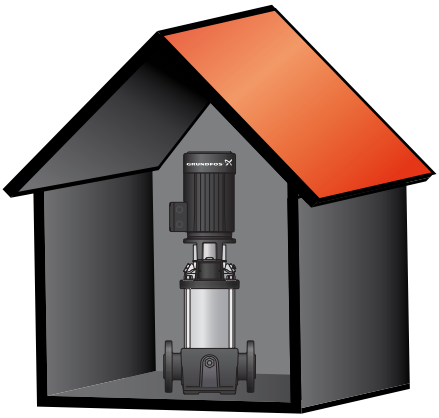

Protection against rain and sun

Drain holes

Motors, which are used outdoors or in humid surroundings, and especially motors which only run intermittently, have to have a drain hole. The drain hole drains off water, i.e. condensation from the stator housing. Grundfos MG and MMG motors are all fitted with a drain hole in the stator housing drive end. When the motor is delivered, the drain hole is sealed with a plug. Once the plug is removed and the drain hole thus open, the motor enclosure class changes from IP55 to IP44.

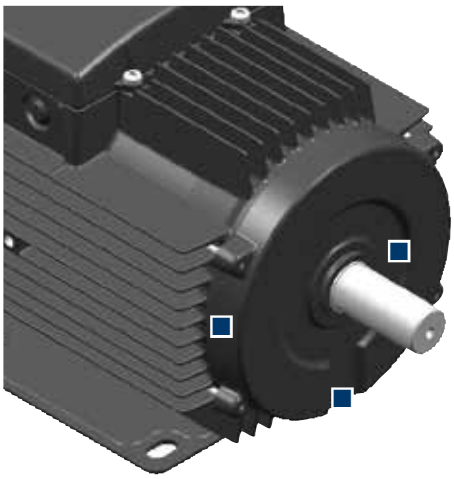

On this illustration the drain holes are marked with blue squares ■

What about corrosion

In order to protect the motor from corrosion attacks, a thin coat of paint finish covers it. Two categories of paint finish exist: normal finish and special finish.

Normal finish

Normal finish is standard and Grundfos motors are normal finish motors. According to the standard DIN 600 721-2-1, e.g. indoor and outdoor installations. This kind of finish is suitable for the climate group **moderate.**

Special finish

Special finish is available for Grundfos motors on request. According to the standard DIN 600 721-2-1, e.g. outdoor installations in corrosive, chemical and marine environments. This kind of finish is suitable for the climate group **worldwide.**

Navy motors are used on ships. These motors are specially designed to withstand corrosion, and are always made of cast iron.

What to know about terminals and direction of rotation

Before you start the motor, make sure that the motor rotates in the right direction.

However, if the direction of rotation does not correspond to your needs, it is possible to change it, and in a very simple way. If the motor in question is a three-phase motor, all you need to do is to interchange the connection of two line cables. If the motor in question is a single phase motor, always check the wiring diagram in the terminal box.

In other cases, the motor has a uni-directional fan – that is a fan that can only turn in one direction. If that is the case, make sure that the direction of rotation is equal the arrow marked on the motor.

Some large 2-pole motors may require uni-directional fans in order to meet specific noise level requirements.

Examples of different pump's direction of rotation

Type	Direction of rotation
CR pumps	CW/ + CCW for high-pressure
TP low head	CW
TP high head	CCW
NB	CCW
NK	CCW

CW stands for clockwise

- seen from the shaft end of the motor.

CCW stands for counter-clockwise

- seen from the shaft end of the motor.

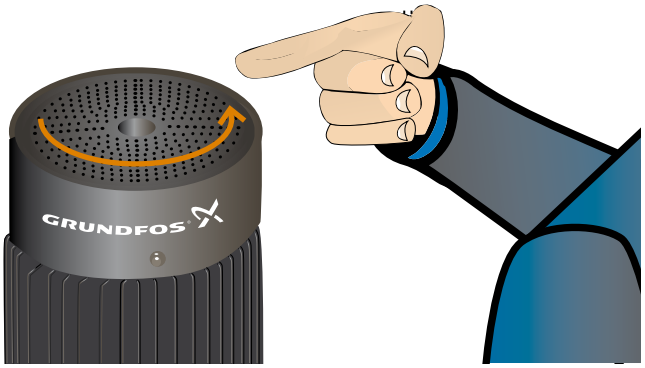

Before you start the motor, make sure that it rotates in the right direction

Terminal box

Normally, motors come with the terminal box on top and with the cable entries from both sides. However, some motors are available with top mounted rotatable terminal boxes 4 X 90 degrees and others are available with side mounted terminal boxes – depending on the installation in which the motor is to operate. For safety reasons, cable entries that are not used have to be closed.

Speaking of safety, when dealing with a motor's terminal box, there are a couple of things to remember:

- Voltage may be connected at standstill inside the terminal box for heating elements or direct winding heating. Therefore NEVER open the terminal box before the motor is disconnected.
- The capacitor of a single-phase motor can retain a charge that appears across the motor terminals, even when the motor is not running.

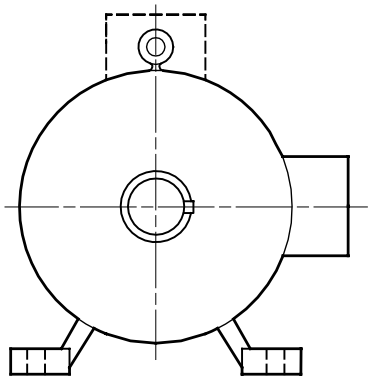

Normally, motors come with the terminal box on top and with the cable entries from both sides. However, some motors are available with top mounted rotatable terminal boxes 4 X 90 degrees and others are available with side mounted terminal boxes

Connection of the motor

There are several ways of connecting a motor. The most common ones are: 3-phase connection, delta (Δ)-connection and star (Y)-connection.

3-phase connection

According to the IEC 60034-8 standard, the windings of a 3-phase standard motor can be connected in either a star (Y)-connection or in a delta (Δ)-connection.

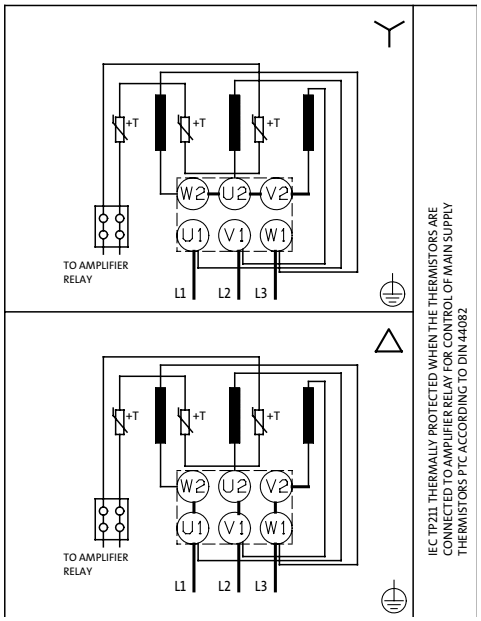

Typical wiring diagram

Star (Y)-connection

By short-circuiting the terminals W2, U2 and V2 and connecting the mains to W1, U1 and V1, you get a star (Y)-connection.

Current: $I_{phase} = I_{mains}$

Voltage: $U_{phase} = U_{mains}/\sqrt{3}$

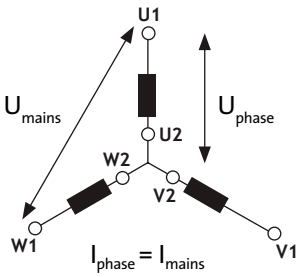

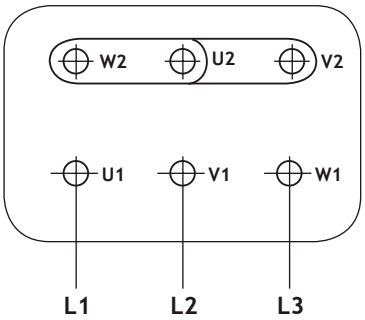

Delta (Δ)-connection

When you connect the end of a phase to the start of another phase you get a delta (Δ)-connection

Current: $I_{phase} = I_{mains}/\sqrt{3}$

Voltage: $U_{phase} = U_{mains}$

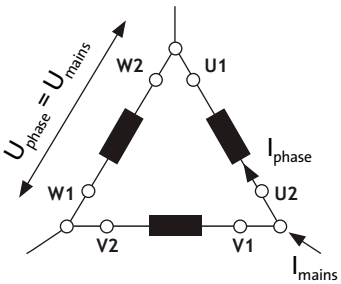

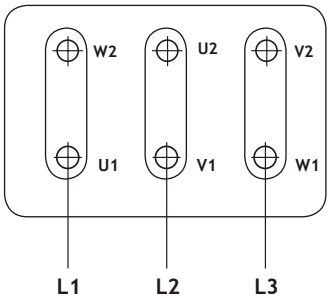

Voltage and frequency variations during operation

Grundfos motors are designed according to the European standards IEC 60034-1 and IEC 60038.
For AC motors rated for use on a power supply of fixed frequency supplied from an AC generator (whether local or via a supply network), combinations of voltage variation and frequency are classified as being either zone A or B.

A motor have to be capable of performing its primary function in zone A. It does not need to comply fully with its performance at rated voltage and frequency and may exhibit some deviations. Temperature rises may be higher than at rated voltage and frequency.

A motor has to be capable of performing its primary function in zone B, but may exhibit greater deviations form its performance than from in zone A. Temperature rises may be higher than at rated voltage and frequency and will most likely be higher than those in zone A. Extended operation at the perimeter of zone B is not recommended.

Voltage and frequency limits for motors

According to the European standard IEC 60038, the mains voltages have to have a tolerance of ± 10%
For the rated voltage to the motors, EN 60034-1 allows a tolerance of ± 5%.
Motors used within Grundfos are designed for the mains rated voltage ranges, see the table to your right.

The permissible maximum temperature for the actual insulation class is not exceeded when the motor is supplied by the rated voltage range. For conditions at the extreme boundaries of zone A the temperature typically exceeds the nominal temperature rise by approximately 10 Kelvin.

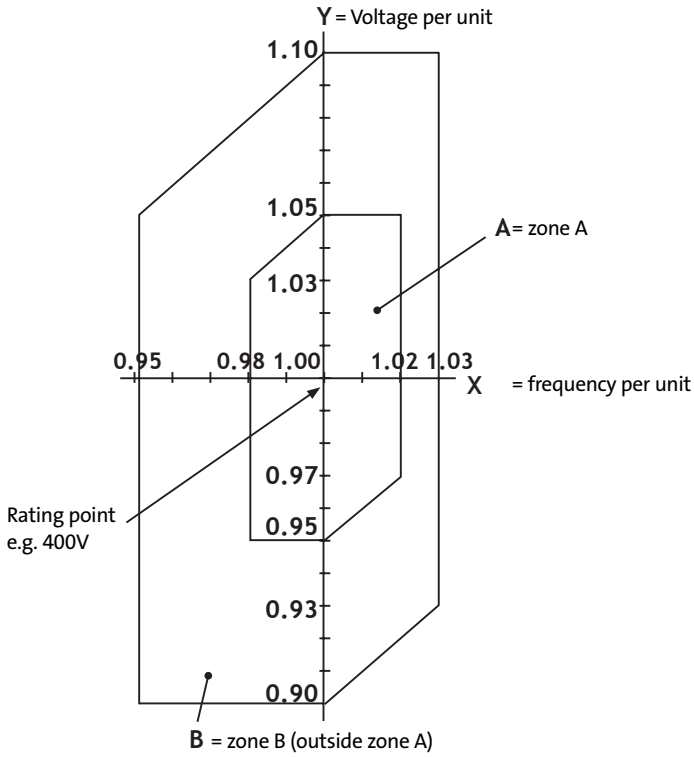

Voltage and frequency variations during operation according to the European standards IEC 60034-1 and IEC 60038

Mains voltage according to IEC 600038	
50 Hz	**60 Hz**
230 V ± 10 %	-
400 V ± 10 %	-
690 V ± 10 %	-
-	460 V ± 10 %

Grundfos motors and rated voltage ranges	
50 Hz	**60 Hz**
220-240 V ± 5 %	220-277 V ± 5 %
380-415 V ± 5 %	380-440 V ± 5 %
380-415 V ± 5 %	380-480 V ± 5 %
660-690 V ± 5 %	660-690 V ± 5 %

How to detect voltage and/or current imbalance

The reason why voltage and current imbalance occur is often located in the mains or in the motor. The mains can either have an imbalance between the phases or a distortion. The imbalance between the phases can be detected by means of a voltmeter. On the other hand the distortion of the voltage cannot be detected by a digital voltmeter, because the RMS voltages do not always change. Often, this is the fault of the motor.

A rotation test of the phases will indicate whether the error is in a motor winding or in the mains. In connection with the rotation test, the phases are changed so that the motor always rotates in the same direction. Remember to note the current in the phases for every single rotation. If the highest current moves with a phase during rotation, the problem is related to the mains. On the other hand, if the highest current is measured on the same motor winding, the problem is related to the motor. There are two possible explanations: Either there are a different number of windings in the motor or a different air gap between the rotor and the stator.

Generally speaking, voltage and current imbalance will always lead to a higher operating temperature, a shorter life span of the motor and a reduction in efficiency.

Phase voltage imbalance

Normally, voltage imbalance leads to current imbalance, which is a great deal higher than the voltage imbalance. The relation between voltage and current is shown in the table on your right-hand side.

Sometimes the voltage imbalance is known before the motor is purchased. If this is the case, then use the derating graph specified in the European standard IEC 892, illustrated on the graph to your right.

Relation between voltage imbalance current				
Voltage imbalance (%)	0	2	3,5	5
Stator current imbalance (%)	100	101	104	107,5
Increase of stator loss (%)	0	4	12,5	25
Temperature increase (Index)	1	1,05	1,14	1,28

Normally, voltage imbalance leads to current imbalance, which is a great deal higher than the voltage imbalance

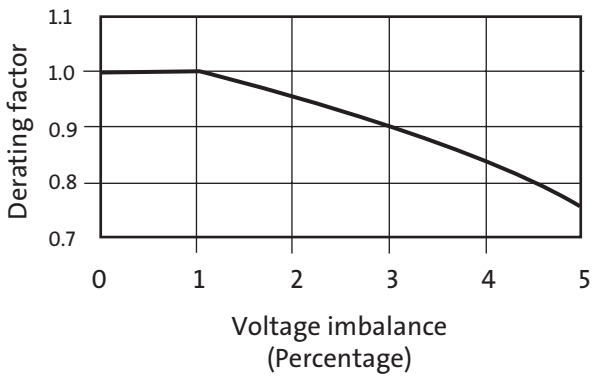

Derating curve specified in the European standard IEC 892

How much imbalance is tolerable?

The tolerable degree of imbalance depends on the situation.

If the motor is driving the load and the highest amperage of the three legs is below the nameplate full-load rating, then generally it is safe to operate. If the highest amperage of the phases is above the nameplate rating, but within 10% above the nameplate rating, it is still safe to operate the motor. It is not unusual to find more unbalanced currents at no load than during load.

Finally, if the highest amperage of the three legs does not exceed more than 10% of the average of the three legs during operation with load, it is safe to operate the motor.

Example:

Nameplate: $I_{1/1}$ = 10.0 Amp.

Phase	Measured phase current
A	10.6
B	9.8
C	10.2

$$I_{average} = \frac{10.6 + 9.8 + 10.2}{3} = 10.2 \text{ A}$$

Difference in percentage

$$\frac{\text{Highest } I_{phase} - I_{average}}{I_{average}} \cdot 100$$

$$\frac{10.6 - 10.2}{10.2} \cdot 100 = \frac{0.4}{10.2} \cdot 100 = 3.9\%$$

What to do if imbalanced voltage/current is present

Problem	Solution
Blown fuse on a power factor correction capacitor bank	Search, find and replace blown fuse
Uneven single-phase loading of the three-phase system	Single-phase loads and distribute them more evenly on the three-phase circuit
Utility unbalanced voltages	If the incoming voltages are substantially unbalanced, especially at light load or no load periods, contact the utility company and ask them to correct the problem.

Generally speaking, imbalanced currents in connection with a three-phase motor should be avoided. However, a low degree of imbalance is acceptable as long as it does not exceed 10% of the average phase current. A high current imbalance, more than 10% of the average phase current, reduces the lifespan of the motor and increases the power consumption. Consequently derating is necessary.

What to know about sound

The sound level in a system is measured in decibel (dB). Noise is unwanted sound. The level of noise can be measured in the following three ways:

1. Pressure – L_p (pa): The pressure of the air waves
2. Power – L_W (W): The power of the sound
3. Intensity - L_I: The power per m^2
   (This will not be covered in this book)

It is not possible to compare the three values directly, but it is possible to calculate between them based on standards.

The rule of thumb is:

$$L_p + 10^* \text{ dB} = L_W$$

* Avarage, as it can differ from 8-14 dB.

The EU Machine Directive prescribes that sound levels has to be indicated as pressure when they are below 85 dB(A) and as power when they exceed the 85 dB(A). Noise is subjective and depends on a persons ability to hear, e.g. young vs. old person. Therefore, the above-mentioned measurements get weight according to what is referred to as the standard ear, see the figure on your right. The weighting is known as A-weighting (dB(A)) and the measurements are adjusted depending on the frequency – in some cases it increases and in other cases it decreases.

Other weightings are known as B and C, but they are used for other purposes, which we do not cover in this book.

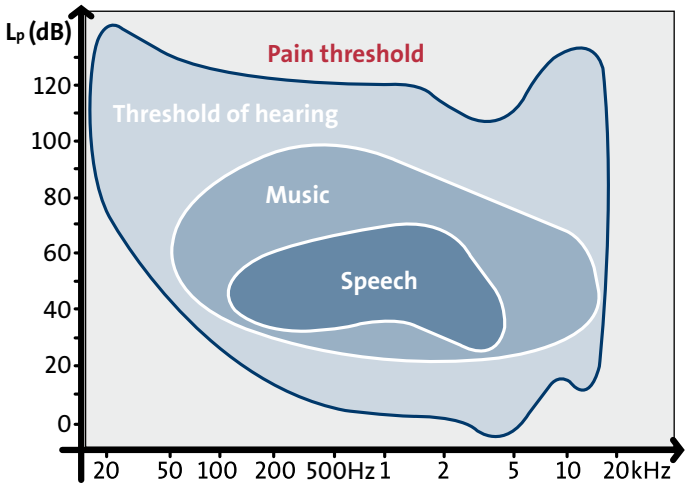

Threshold of hearing vs. frequency

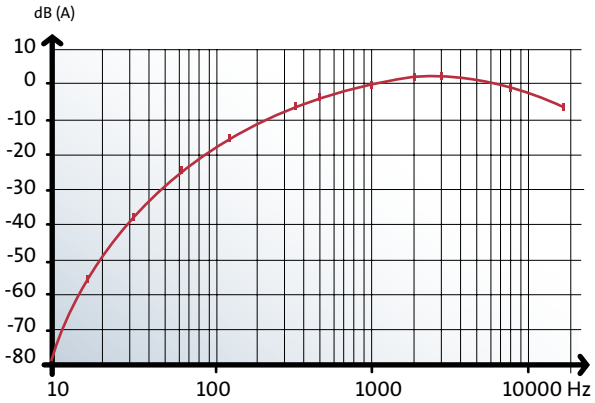

Weighting curve

It is not possible to compare the three values directly, but it is possible to calculate between them based on standards

What to know about sound measurement on motors

Grundfos motors comply with the European standards concerning sound pressure (L_p) and sound power (L_W) measurements:

- EN ISO 3743
- EN ISO 4871
- EN ISO 11203
- EN 21683, ISO 1683

Depending on what you need to know about the sound pressure (L_p) and sound power (L_W), you need to consult the following standards:

1. The sound power (L_W) is measured according to ISO 3743-2.
2. The sound power (L_W) is converted to a mean sound pressure (L_p) at 1 m distance from the test object by means of EN ISO 11203.
3. To the measurement of both 50 and 60 Hz are added 3 dB according to EN ISO 4871. This is done in order to include inaccuracies of the measuring instruments and calibration equipment as well as production tolerances in the products.

Typically, the sound pressure (L_p) is measured at 1 m distance from the test object at a pressure reference of 20 µpa, corresponding to 0 dB. The sound power (L_W) is measured at a reference of 1 pW.

The sound power (L_W) is a calculated unit and must not be mixed up with the sound pressure (L_p) even if both are expressed in dB(A).

Other motor manufactures use similar standards, but it can differ.

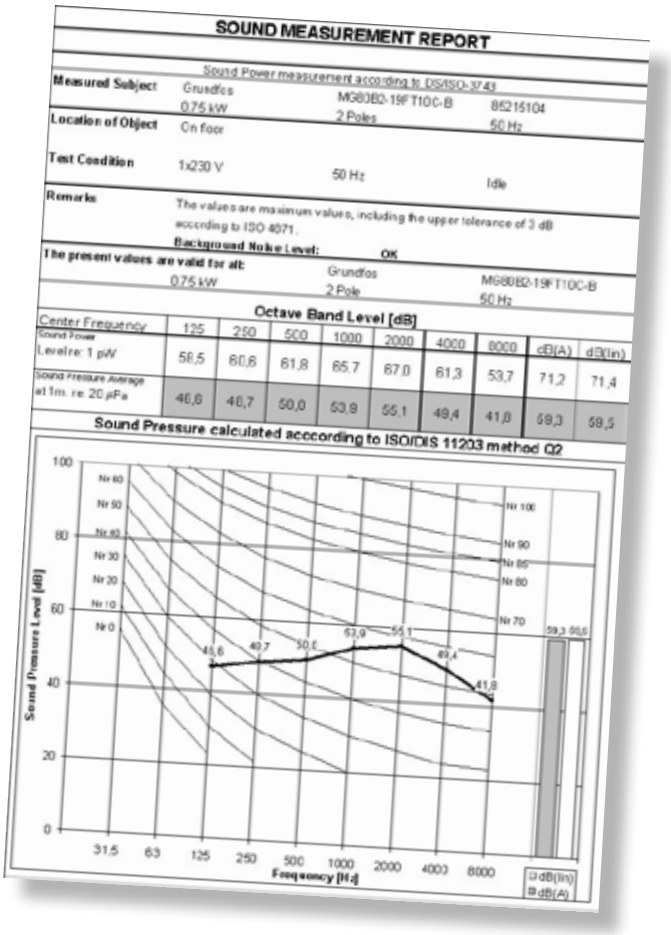

Grundfos sound measurement report

What to know about sound

Sound pressure from several sound sources

Sound pressures from two sound sources are added according to the formula below.

Example:

$$L_{P\,total} = 10 \cdot \log\left(10^{\frac{L_{p1}}{10}} + 10^{\frac{L_{p2}}{10}}\right)$$

$$L_{P\,total} = 10 \cdot \log\left(10^{\frac{45}{10}} + 10^{\frac{50}{10}}\right) = 51.19$$

Sound source 1: 45 dB (A)
Sound source 2: 50 dB (A)

Sound source 2 \ Sound source 1 dB	41	42	43	44	45	46	47	48	49	50
41	44.0	44.5	45.1	45.8	46.5	47.2	48.0	48.8	49.6	50.5
42	44.5	45.0	45.5	46.4	46.8	47.5	48.2	49.0	49.8	50.6
43	45.1	45.5	46.0	46.5	47.1	47.8	48.5	49.2	50.0	50.8
44	45.8	46.1	46.5	47.0	47.5	48.1	48.8	49.5	50.2	51.0
45	46.5	46.8	47.1	47.5	48.0	48.5	49.1	49.8	50.5	51.2
46	47.2	47.5	47.8	48.1	48.5	49.0	49.5	50.1	50.8	51.5
47	48.0	48.2	48.5	48.8	49.1	49.5	50.0	50.5	51.1	51.8
48	48.8	49.0	49.2	49.5	49.8	50.1	50.5	51.0	51.5	52.1
49	49.6	49.8	50.0	50.2	50.5	50.8	51.1	51.5	52.0	52.5
50	50.5	50.6	50.8	51.0	51.2	51.5	51.8	52.1	52.5	53.0

Sound pressures from two sound sources are added

Sound pressure in relation to speed

The sound pressure of a fan rises with the motor speed. The resulting sound pressure change can be estimated by means of the following formula

$$\Delta L_p = 50 \cdot \log \frac{n_2}{n_1}\ \text{dB (A)}$$

Delta L_p is the sound pressure change resulting from a speed change from n1 to n2. The formula applies both to speed increase and speed reduction.

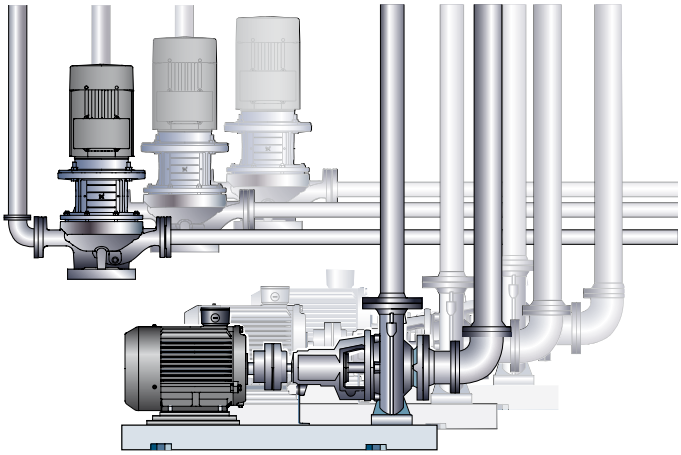

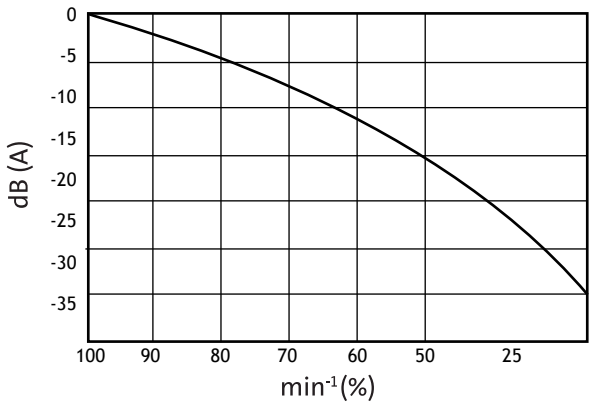

The sound level decreases when the motor speed decreases

What to know about sound

Alfa Laval

10. Starting methods

Starting methods 212
Inrush current or locked-rotor current? 212
Direct-on-line starting (DOL) 213
Advantages 213
Drawbacks 213
Star-delta starting (SD) 214
Advantages 214
Drawbacks 214
Comparison of direct-on-line starting and star-delta starting 216
Auto-transformer starting 217
Advantages 217
Drawbacks 217
Torque versus voltage 217
Soft starting 218
Advantages 218
Drawbacks 218
Frequency converter starting 219
Advantages 219
Drawbacks 219
Run-up time 220
Summary 220

Starting methods

Today, various methods for starting motors are available. Changes, such as higher starting currents for new energy-efficient motor designs, mean greater focus on starting methods. This is closely linked to the fact that power quality has become a much more important issue in recent years, which has in turn led to greater emphasis on voltage transients associated with the start-up of large motors. This section will outline the various starting methods used today and provide brief descriptions of their advantages and drawbacks.

Inrush current or locked-rotor current?

When a motor is energized, the resulting initial current transient is known by various names: inrush current, starting current, or locked-rotor current. Mostly, these terms all refer to the same thing: a very large current – five to ten times the full-load current – flows initially. This surge current drops as the motor accelerates up to its running speed.

Different starting methods are used in order to reduce the starting current to comply with local laws and regulations. Naturally, avoiding huge voltage drops on the mains is a significant objective in its own right.

On the following pages, you can read about the most common starting methods: Direct-on-line starting, star-delta starting, auto-transformer starting, soft starting and frequency converter starting.

Rated motor current during acceleration

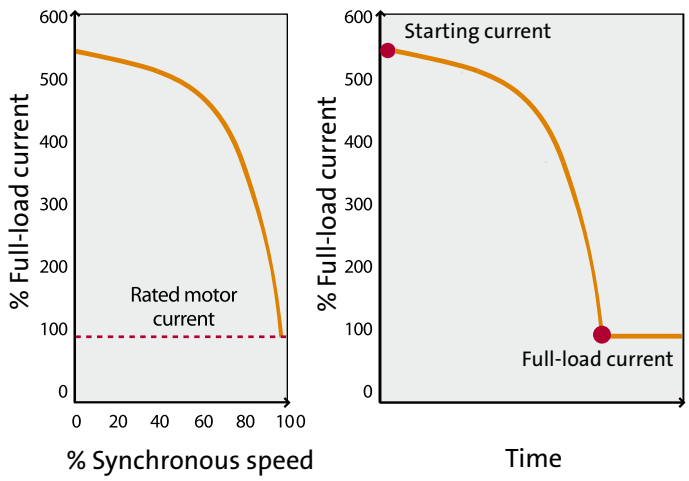

The surge current is reduced as the motor accelerates up to its full-load speed

Direct-on-line starting

As the name suggests, direct-on-line starting means that the motor is started by connecting it directly to the supply at rated voltage. Direct-on-line starting, (DOL), is suitable for stable supplies and mechanically stiff and well-dimensioned shaft systems – and pumps qualify as examples of such systems.

Advantages

DOL starting is the simplest, cheapest and most common starting method. Furthermore it actually gives the lowest temperature rise within the motor during start up of all the starting methods. It is the obvious choice wherever the supply authority's current limiting restrictions allow for its use. Power plants may have varying rules and regulations in different countries; for example, three-phase motors with locked-rotor currents above 60 A must not use direct-on-line starting in Denmark. In such cases, it will obviously be necessary to select another starting method. Motors that start and stop frequently often have some kind of control system, which consist of a contactor and overload protection such as a thermal relay.

Drawbacks

Small motors which do not start and stop frequently need only very simple starting equipment, often in the form of a hand-operated motor protection circuit breaker.

Full voltage is switched directly onto the motor terminals. For small motors, the starting torque will be 150% to 300% of the full-load value, while the starting current will be 300% to 800% of the full-load current or even higher.

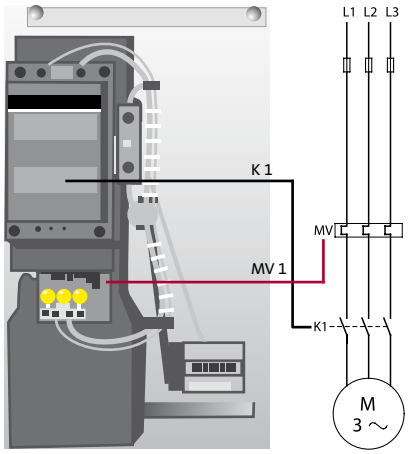

K 1 = Main contactor
MV 1 = Overload relay

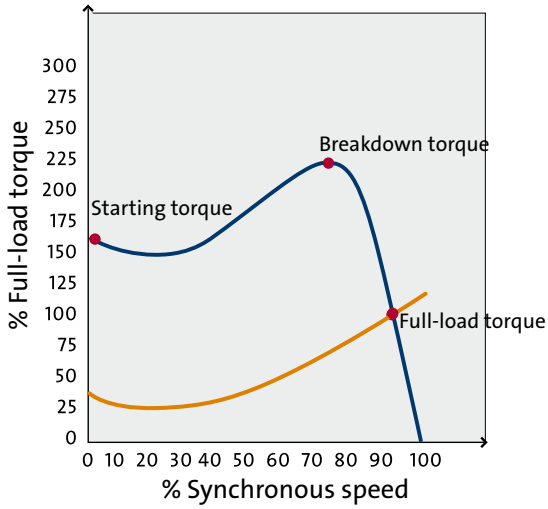

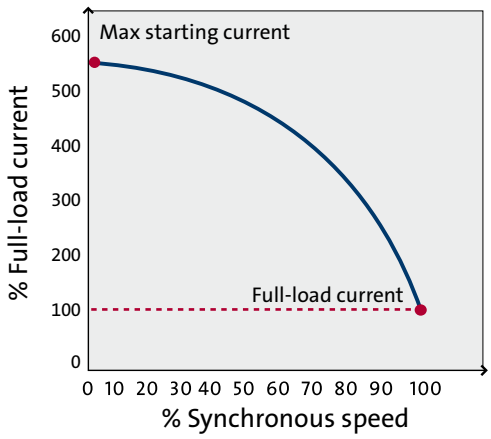

Star-delta starting

The objective of this starting method, which is used with three-phase induction motors, is to reduce the starting current. In starting position, current supply to the stator windings is connected in star (Y) for starting. In the running position, current supply is reconnected to the windings in delta (Δ) once the motor has gained speed.

Advantages

Normally, low-voltage motors over 3 kW will be dimensioned to run at either 400 V in delta (Δ) connection or at 690 V in star (Y) connection. The flexibility provided by this design can also be used to start the motor with a lower voltage. Star-delta connections give a low starting current of only about one third of that found with direct-on-line starting. Star-delta starters are particularly suited for high inertias, where the load are initiated after full load speed.

Drawbacks

But they also reduce the starting torque to about 33%. The motor is started in Y-connection and accelerated and switched to the star-delta connection. This method can only be used with induction motors that are delta connected to the supply voltage.

If the changeover from star to delta takes place at too low a speed, this can cause a current surge which rises almost as high as the corresponding DOL value.

During the even small period of switch over from start to delta connection the motor looses speed very rapidly, which also calls for higher current pulse after connection to delta.

The two illustrations to the right show two features which should be taken into consideration when using star-delta starting. The starter first connects the motor in star (contactor K1 and K3). After a time period – which depends on individual needs – it connects the motor in delta contactor K3 open and contactor K2 close.

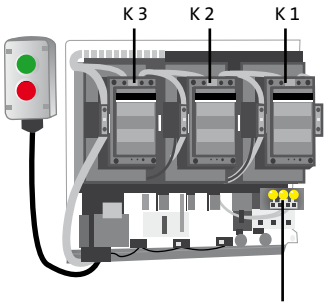

Star-delta starter with contactors and overload relay

K 1 = Main contactor
K 2 = Delta contactor
K 3 = Star contactor
MV 1 = Overload relay

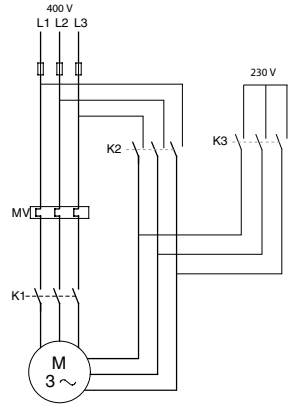

Line diagram for star-delta starter

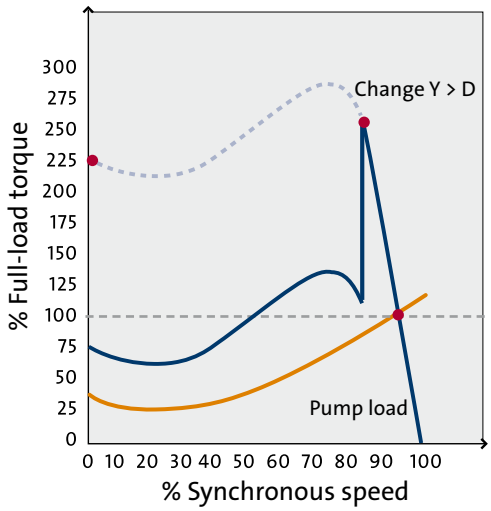

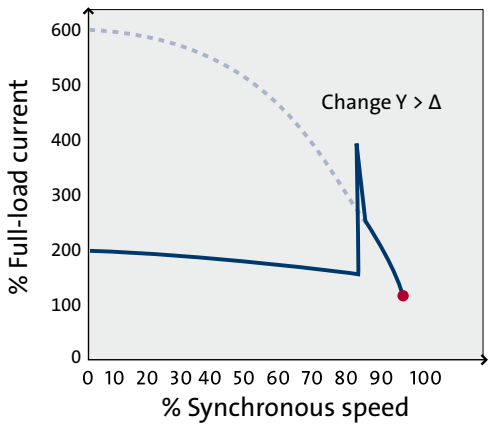

Star-delta starting

Grundfos pumps and motors which carry the designation 3 x 380 - 415 V Δ but NOT 690 V Y can also be started by means of star-delta starters, while the real voltage to the motor never exceed 400 V.

Starting torque and current are considerably lower at star-delta starting than at direct-on-line starting: one third of the equivalent DOL value.

Mismatching of motor torque speed curve and load torque speed curve. In the example shown here, the motor would slowly accelerate up to approximately 50 per cent rated speed.

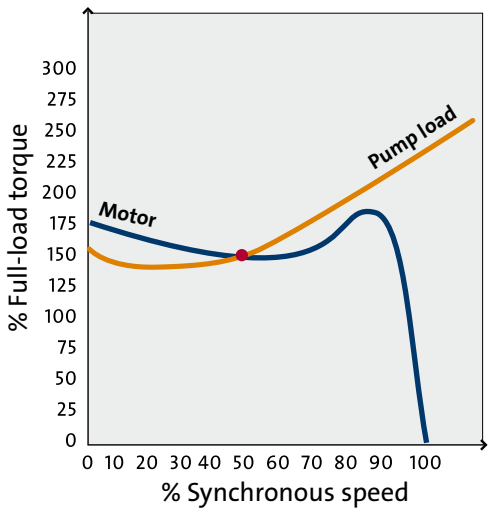

Mismatching of motor torque speed curve and the load torque speed curve. In this example, the motor would slowly accelerate up to approximately 50 per cent rated speed.

Comparision of DOL and star-delta starting

The following graphs illustrate currents for a Grundfos CR pump started with a Grundfos MG 7.5 kW motor by means of DOL and star-delta starting, respectively. As you will see, the DOL starting method features a very high locked-rotor current which eventually flattens and becomes constant. The star-delta starting method features a lower locked-rotor current, but peaks during the starting process as the changeover from star to delta is made.

When starting in star (t = 0.3 s), the current is reduced. However, when switching over from star to delta (at t = 1.7 s), the current pulse reaches the same level as the locked-rotor current seen with direct-on-line starting. The current pulse can even get higher, because the motor during the switching period is un-powered which means it reduce speed before the full voltage (delta voltage) are supplied.

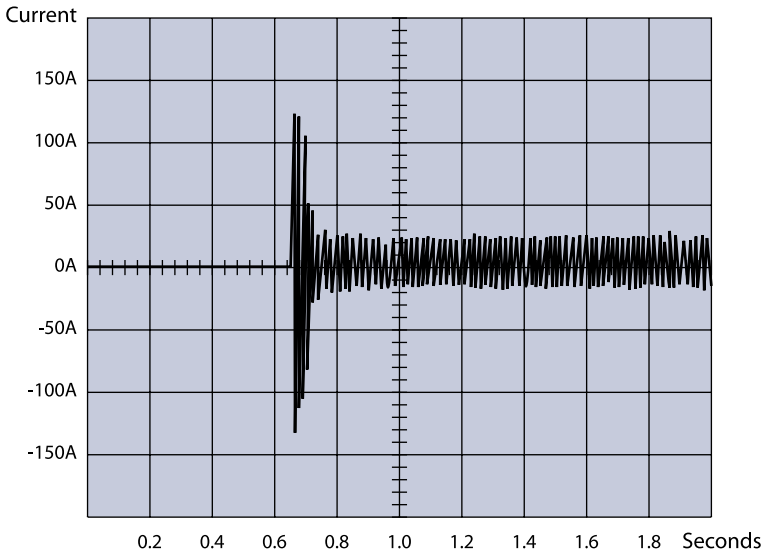

Direct-on-line starting of a Grundfos 7.5 kW motor installed on a Grundfos CR pump

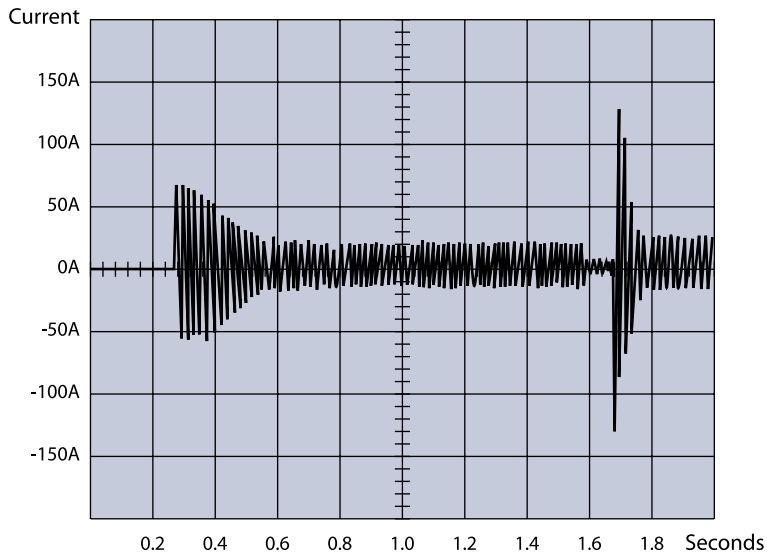

Star-delta starting of a 7.5 kW Grundfos motor installed on a Grundfos CR pump

Auto-transformer starting

As the name clearly states, auto-transformer starting makes use of an auto-transformer coupled in series with the motor during starting.

Advantages

The auto-transformer contains transformers, often featuring two voltage reductions, which reduce voltage to provide low-voltage starting by tapping off the secondary voltage of the auto-transformer, usually at approximately 50 - 80 per cent of full voltage. Only one tapping is used, depending on the starting torque/current required. Of course, reduced voltage to the motor will result in reduced locked-rotor current and torque, but this method gives the highest possible motor torque per line ampere. At no point in time is the motor not energised, so it will not loose speed as is the case with star-delta starting. The time of the switch between reduced and full voltage can be adjusted to suit specific requirements.

Drawbacks

Besides a reduced locked rotor torque, the auto-transformer starting method has yet another disadvantage.

Once the motor has started running, it is switched over to the mains voltage – this will cause a current pulse.

Torque versus voltage

The values for starting torque are reduced at a rate corresponding to the square of the reduction in volts.

$$\left(\frac{\text{Voltage}_2}{\text{Voltage}_1}\right)^2 = \frac{\text{Torque}_2}{\text{Torque}_1}$$

$$\left(\frac{U_2}{U_1}\right)^2 = \frac{T_2}{T_1}$$

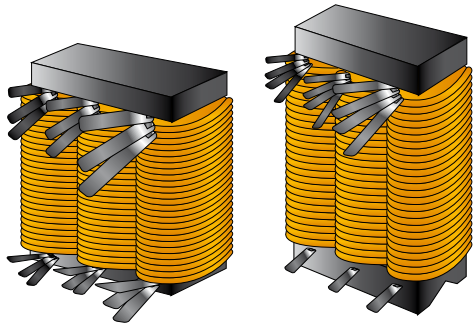

Auto-transformers and Reactors

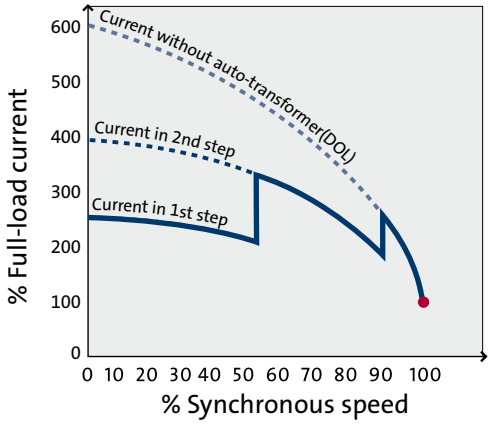

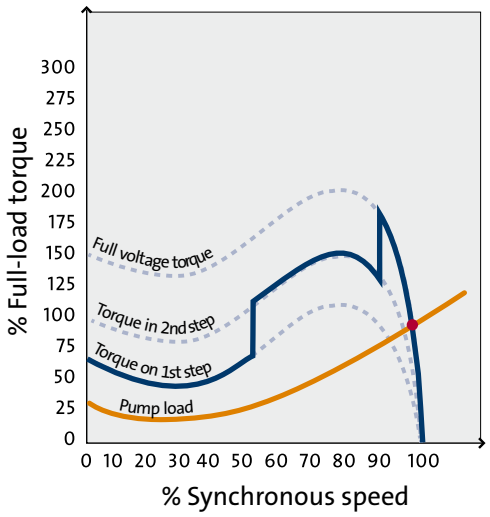

Soft starting

A soft starter is, as you would expect, a device which ensures a soft start of a motor.

Advantages

Soft starters are based on semiconductors. Via a power circuit and a control circuit, these semi-conductors reduce the initial motor voltage. This results in lower motor torque. During the starting process, the soft starter gradually increases the motor voltage, thereby allowing the motor to accelerate the load to rated speed without causing high torque or current peaks.
Soft starters can also be used to control how processes are stopped. Soft starters are less expensive than frequency converters.

Drawbacks

They do, however, share the same problem as frequency converters: they may inject harmonic currents into the system, and this can disrupt other processes.

The starting method also supplies a reduced voltage to the motor during start-up. The soft starter starts up the motor at reduced voltage, and the voltage is then ramped up to its full value. The voltage is reduced in the soft starter via phase angle. In connection with this starting method current pulses will not occur. Run-up time and locked-rotor current (starting current) can be set.

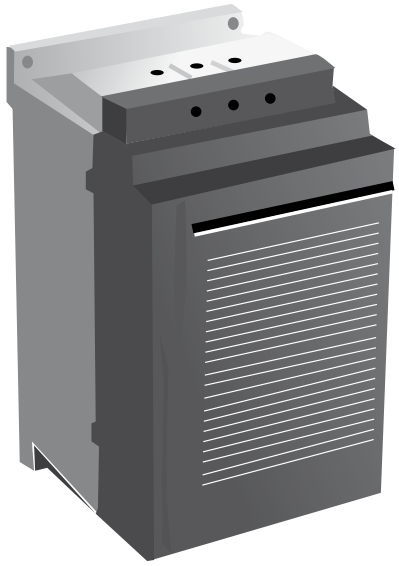

Softstarter

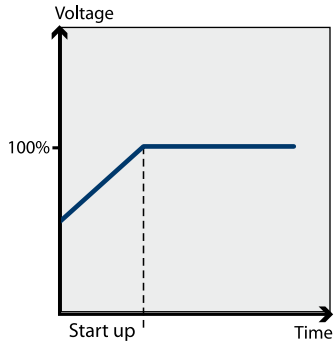

Voltage ramp for soft starter.
Run-up time is around 1 sec.

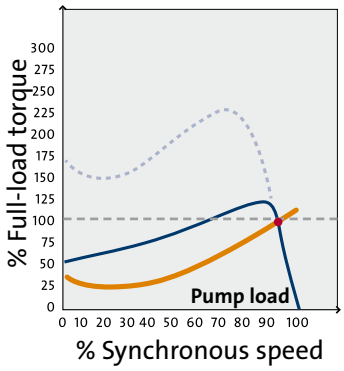

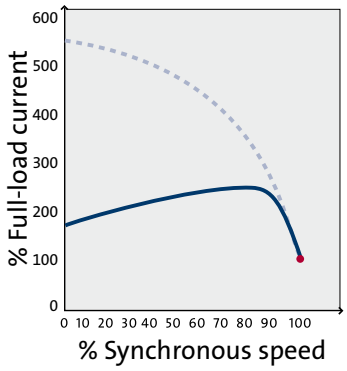

Frequency converter starting

Frequency converters are designed for continuous feeding of motors, but they can also be used for start-up only.

Advantages

The frequency converter makes it possible to use low starting current because the motor can produce rated torque at rated current from zero to full speed. Frequency converters are becoming cheaper all the time. As a result, they are increasingly being used in applications where soft starters would previously have been used.

Drawbacks

Even so, frequency converters are still more expensive than soft starters in most cases; and like soft starters, they also inject harmonic currents into the network.

Frequency converter

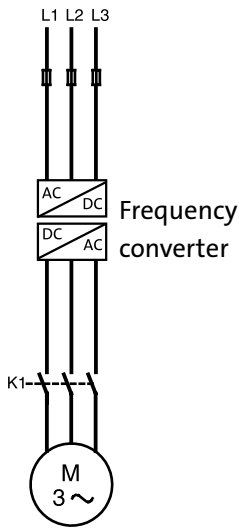

Line diagram for a motor operated by a frequency converter

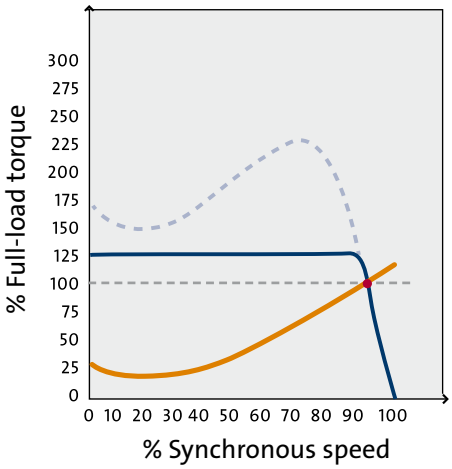

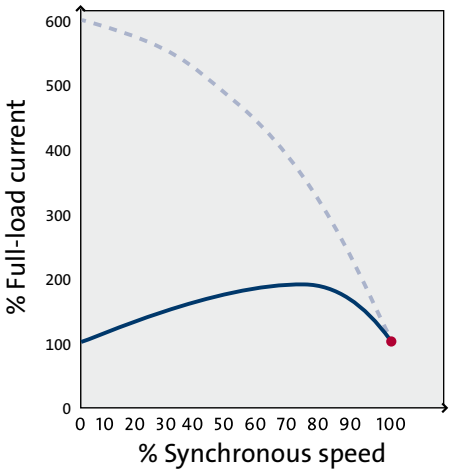

Run-up times

As regards those starting methods which are to reduce the locked-rotor current, the run-up time must not be too long. Excessive run-up times will cause unnecessary heating of the winding.

Summary

The principle objective of all methods of motor starting is to match the torque characteristics to those of the mechanical load, while ensuring that the peak current requirements do not exceed the capacity of the supply. Many starting methods are available, each of which has slightly different characteristics. The following table summarizes the main characteristics for the most popular starting methods.

Starting method	Pros	Cons
Direct-on-line starting (DOL)	Simple and cost-efficient. Safe starting. Highest possible starting torque	High locked-rotor current.
Star/delta starting (SD)	Reduction of locked-rotor current by a factor 3.	High current pulses when switching over from star to delta. Not suitable if the load has a low inertia. Reduced locked-rotor torque.
Auto-transformer	Reduction of locked-rotor current by u^2, where u is the voltage reduction e.g. 60% = 0.60.	Current pulses when switching from reduced to full voltage. Reduced locked-rotor torque.
Soft starter	"Soft" starting. No current pulses. Less water hammer when starting a pump. Reduction of locked-rotor current as required, typically 2-3 times.	Reduced locked-rotor torque.
Frequency starter	No current pulses. Less water hammer when starting a pump. Reduction of locked-rotor current as required, typically to around full-load current. Can be used for continuous feeding of the motor.	Reduced locked-rotor torque. Expensive.

Summary

GRUNDFOS

11. Maintenance

Motor maintenance 224
- Preventive maintenance 224
- Predictive maintenance 224
- Reactive maintenance 224

What to know about PREVENTIVE maintenance 225
- Motor ventilation 225
- Humidity and condensation 225
- Loose connections 226
- Voltage and current imbalance 226
- Undervoltage and overvoltage 226

Bearings 227
- Bearing life 227
- Bearing lubrication 228
- Lubrication type 228
- Lubricants for motors 229
- Lubrication Intervals 230
- Greased-for-life bearings 231
- How much lubricant? 231
- Motors with lubrication system 232
- Manual re-lubrication 233
- Automatic re-lubrication 233

What to know about PREDICTIVE maintenance 234
- Bearing considerations 234
- Insulation considerations 234
- Ground insulation test 235
- Measurement 235
- Checking 236
- Cleaning and drying stator windings 237
- Surge test 238
- High-potential testing – HIPOT 239
- DC high potential ground test 239
- AC high potential phase to ground test and phase-to-phase test 240
- Motor temperature 241
- Thermographic inspection 242

What to know about REACTIVE maintenance 243
- When to repair instead of replacing 243
- How to ensure high-quality repair work 245
- Bearing replacements 246
- Dismounting 246
- Mounting of new bearings 246
- Bearing mounting precautions 247
- Running test 247
- Spare parts for pump motors 248
- Measurement of repaired motor 249
- Perpendicularity of mounting face of flange to shaft 250

Conclusion 250

Motor maintenance

Motors need maintenance regularly in order to avoid failure and prolong their lifespan. Generally speaking, motors and motor parts should be maintained and tested at least every 6 months. Only then is it possible to maintain a motor's life and its efficiency. In this section we will deal with three kinds of maintenance: Preventive maintenance, predictive maintenance and reactive maintenance.

Preventive maintenance

The objective of this kind of maintenance is to prevent operating problems and make sure that the motor continuously provides a reliable operation. Usually, preventive maintenance is a scheduled part of maintaining a whole system.

Predictive maintenance

The objective of this kind of maintenance is to ensure that the right kind of maintenance is carried out at the right time. In order to define these two parameters, it is necessary to monitor the motor operation regularly and thereby detect problems before they actually occur. By keeping a logbook it is possible to compare historical data on a wide range of parameters and thereby anticipate potential problems.

Reactive maintenance

The main objective of this kind of maintenance is to repair and replace the motor when a failure occurs. Reactive maintenance or breakdown maintenance as it is referred to as well, does not imply any regular service or tests.

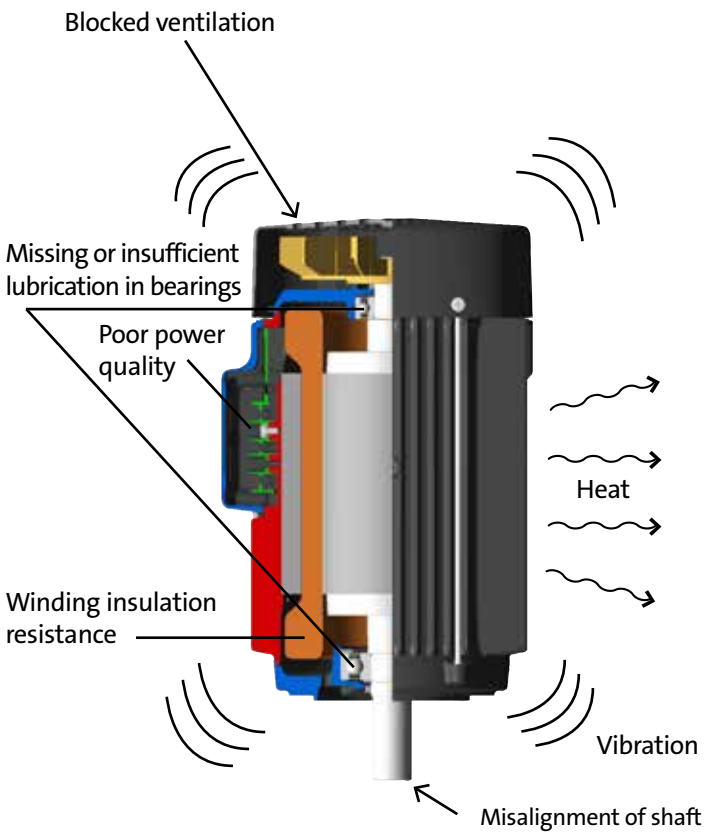

Factors which affect the life span of the motor due to lack of maintenance

What to know about PREVENTIVE maintenance

Unexpected downtimes are costly because they often imply that a whole manufacturing process or parts of it is put to a stop. Preventive maintenance on a regular basis can help prevent motors to fail and thus, prevent unexpected production stops. On the following pages, we will present some of the most important elements that preventive maintenance includes.

Motor ventilation

If the motor is installed and operates in an area with limited ventilation, the motor temperature may reach high temperatures that can damage the motor's insulation and bearing grease, and cause it to fail. Dust and dirt often block the ventilating passages. Therefore, in order to prevent the motor from overheating, it is important to blow away the dirt on a regular basis.

Even though motors are protected, it is important to install them in areas with constant ventilation so that high temperatures do not damage insulation and bearings. The cooler a motor operates, the longer lifetime it has. Therefore, the fan cover and the cooling fin always have to be as clean as possible.

Humidity and condensation

In IP55 closed motors, water vapour may condense and consequently reach the motor windings and the bearings. Therefore, in this kind of motor, the motor temperature must always be warmer than the surrounding temperature during standstill. This can be done by using another solution is to remove the drain plugs allowing condensed water to escape. Removing the drain plugs will change the motor enclosure from IP55 to IP44.

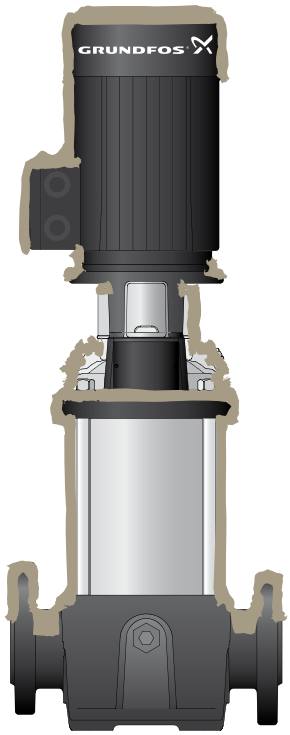

Dust and dirt often block the ventilating passages

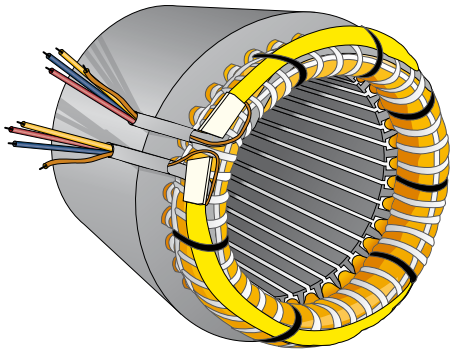

Stator equiped with heating element to prevent condensation problems

What to know about PREVENTIVE maintenance

Loose connections

All electrical connections must be kept tight and torqued according to the recommended values. Cold or creep flow during load cycles often cause joint failure. Fuses, cable connections, contactors and circuit breakers are often subject to loose connections and should thus be checked regularly as well.

Voltage and current imbalance

Voltage and current imbalance is certainly an area of concern and the values should be checked regularly in order to avoid problems with the motor. Voltage imbalance occurs when the voltage of three phases differs from one another. Voltage imbalance causes line currents to be unequal as well. This results in different kinds of problems: Vibrations, torque pulsations and overheating of one or more of the phase windings. The voltage imbalance leads to a decrease in the motor's efficiency and shortens its life.

Undervoltage and overvoltage

Undervoltage and overvoltage wear out the motor's stator insulation. Undervoltage stresses the temperature in the insulation. At lower voltages, motors run at a reduced full-load efficiency, run hotter, have a larger slip, produce less torque, and may have a shorter lifespan. Usually, induction motors are capable of handling overvoltage situations. However, severe overvoltage may cause turn-to-turn, phase-to-phase or phase-to-ground short circuiting; that is a short-circuit between the phases or between the phases and the frame.

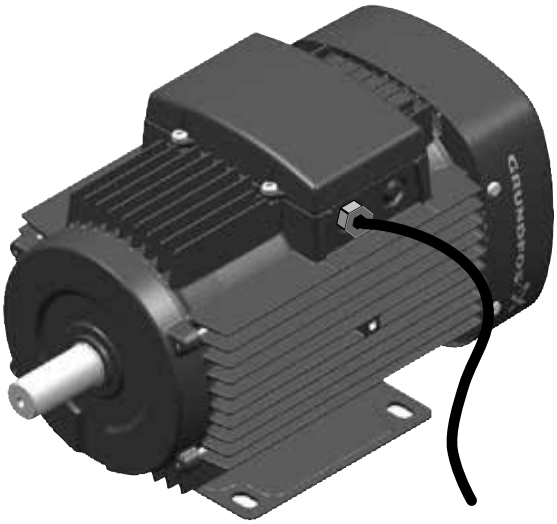

All electrical connections must be kept tight and torqued

Voltage imbalance			
U_{phase} (V)		U_{mean} (V)	Imbalance
1	410	$\frac{410 + 402 + 388}{3} = 400$ V	410 - 388 = 22 V $\frac{22}{400} \cdot 100 = 5\%$
2	402		
3	388		

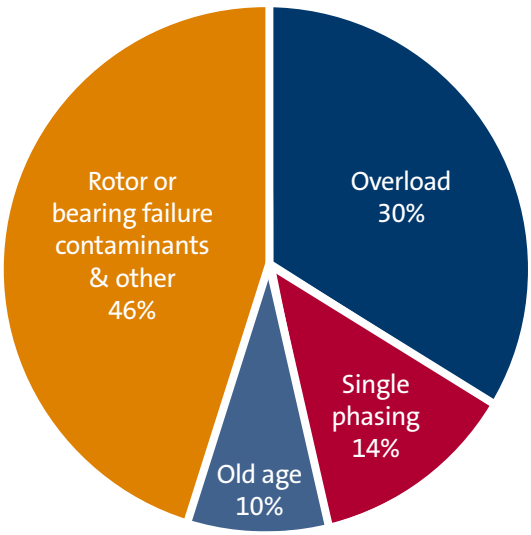

The major causes of motor failure, according to the Electrical Research Association, USA

Bearings

Today, bearings are the components in the motor that are most exposed to wear. The reason is that the insulation system is no longer subject to high temperatures because the efficiency of motors has improved over the years. The most common error is no longer short circuit but noise from the bearings and bearing damage. Therefore, when carrying out preventive maintenance on the motor, replacement and maintenance of bearings are indeed important factors.

Some bearings are referred to as greased-for-life bearings or maintenance free bearings. However, these terms are misleading; they do not imply that the bearings do not need maintenance at all.
Greased-for-life bearings or maintenance-free bearings have to be replaced eventually. When, depends on either the lifespan of the bearings (L_{10h}) or on the lifespan of the grease that is used as lubrication (F_{10h}). The lifespan of the bearing varies between 16,000 - 40,000 hours or more. As to the lifespan of the grease it is normally at least 40,000 hours under normal operating conditions.

Bearing life

It is possible to calculate the lifespan of bearings based on the material fatigue if we know the motor's operating load and speed. To make these calculations it is essential that the bearings are mounted and lubricated correctly. The calculations do not take the effect of adverse operating conditions into account.

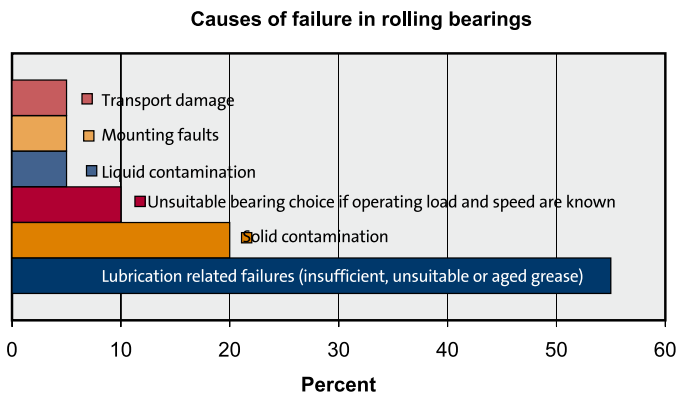

Causes of failure in rolling bearings.
Only about 1% of all rolling bearings reach expected life.

Bearing lubrication

Bearings in standard motors are always lubricated with grease either once and for all *(greased-for-life)* or they may be *relubricated* via *lubrication nipples*. Actually, only a small amount of bearings reach their optimum lifespan. The explanation is linked to maintenance. The major reasons for premature bearing failure are:

- Wrong mounting
- Contamination
- Incorrect handling
- Incorrect maintenance
- Incorrect or no lubricant,
  (too old lubricant, wrong amount of lubricant, dirt in lubrication etc.)

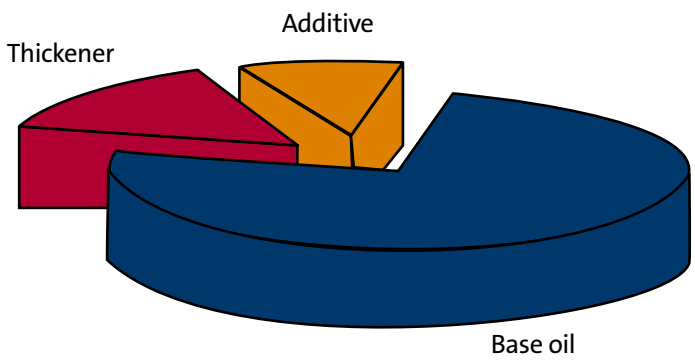

Composition of grease

Lubrication type

We distinguish between two types of lubrication: Oil and grease. Basically, oil is the ideal lubricant for bearings. However, grease seems to have gained ground over the years. Grease is made of soap or of non-soap thickeners that provide a much better utilisation of the oil. Today, grease is used for lubricating the majority of all bearings. The reason is that the bearing enclosure designs have become simpler and thus requires less maintenance than before, are exposed to less leakage and provide better sealing against dirt.

Grease is a very effective method for lubricating bearings. What follows is a list of the most evident advantages that grease has to offer:

- Because of its texture, grease is easier to handle than oil.
- Grease acts as a seal and prevents entry of contaminants inside the bearing.
- Convenience - some bearings are factory-sealed and greased and require no maintenance before they are replaced.
- Cost effective – Bearings that are sealed and greased reduce the number of parts in the motor. There is no need for bearing covers, nipples etc.

Greases differ from one another in the way that they are composed. Greases are made of three components: Base oil, thickener and additive. The type of base oil, oil viscosity, thickener and thickener content determine the grease properties. Physical properties such as consistency or penetration, torque resistance, dropping point, evaporation loss, and water washout are determined by standardised tests. These tests help determine when a specific grease is better suited for an application than another grease. Thousands of greases are available on the market with different formulations and performance characteristics.

On an average, motor bearings are warmer than other bearings. They are loaded both by the friction heat arising from their rotation and by the heat loss from the motor windings and the rotor core. This means that greases with good high-temperature properties or regular relubrication are particularly required for motor bearings. All suppliers of bearings provide an assortment of greases particularly suitable for electric motors.

The sceme on your right-hand, show some examples of bearing lubricants for motors.

Lubricants for motors

As a general rule, always relubricate a bearing with the same lubricant as used originally. However, if it is necessary to use a different lubricant, remove all traces of the old lubricant in the bearing and housing before relubricating the bearings.
Never mix greases with different thickeners, before checking with the supplier. Some lubricants are compatible, but it is very difficult to determine. Therefore, if you need to mix two lubricants, always check with the supplier.

For closed greased-for-life bearings	
Chevron SRI-2 Grease	Polyurea thickener
Klüberquiet BQH 72-102	Polyurea thickener
For open regreaseable bearings	
EXXON UNIREX N3	Lithium thickener
EXXON UNIREX N2	Lithium thicekner
Shell Alvania Grease G3	Lithium thickener

Examples of bearing lubricants for motors

Bearings

Lubrication Intervals

The lubrication period and type of bearings are indicated on the motor's nameplate or on a separate label on the motor. If, however, this is not the case, check the supplier's recommendations. Generally speaking, the lubricating efficiency of grease decreases with time. Therefore, the bearings must have fresh grease at proper intervals. The lubrication intervals depend on the following factors: The size of the motor, working conditions, type of grease used and most importantly on the number of poles, the operation speed and the working temperature.

Furthermore, other factors affect the relubrication interval:

- Vertical mounting – relubrication interval should be 50% reduced.
- Dirty/dusty environment – relubrication interval should be 25% reduced.
- High humidity environment – relubrication interval should be 10% reduced.

The characteristic bearing value determines the basic lubrication interval. The illustration on your right side shows a simplified curve for high-temperature grease for motors. The basic lubrication interval $\mathbf{t_f}$ is an expression of the grease life - F_{10h} with a failure rate of approximately 10%.

If there are any deviations in the basic lubrication interval $\mathbf{t_f}$, the lubrication interval has to be reduced $\mathbf{t_{fq}}$ by some reduction factors.

$$F_{10h} \text{ or } t_{fq} = t_f \cdot f_2 \cdot f_3 \cdot f_4 \cdot f_5 \cdot f_6$$

Sometimes the reduced relubrication interval is much shorter than the basic relubrication interval under varying operating conditions. If the reduced relubrication interval is not respected it can lead to a considerable higher failure rate.

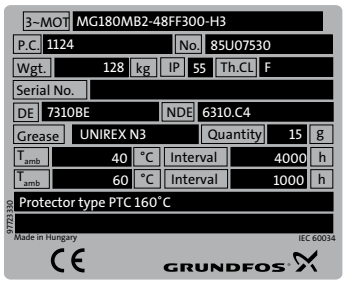

Typically, the regreasing information is listed on a separate label placed on the fan cover or directly on the motor's nameplate

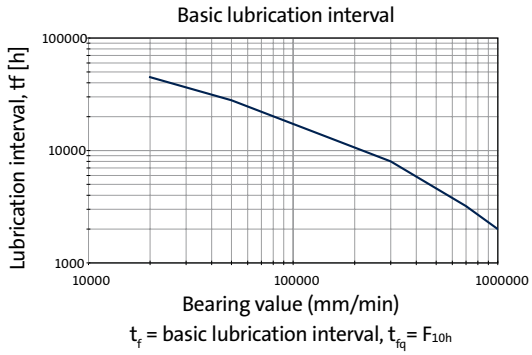

The bearing value = $K_f \cdot n \cdot d_m$ [mm/min]

K_f : Type of bearing
Deep-groove ball bearings = 1
Angular contact bearings = 1.6

n : Speed of bearing [min^{-1}]

d_m : Average diameter of bearing = $\frac{D+d}{}$ [mm]
D = outer diameter of the bearing [mm]
d = the inner diameter [mm]

Reduction factor		Reduction level	Reduction values
f_1	Dust and humidity on working faces of bearing	Moderate	f_1 = 0,9 to 0,7
		Heavy	f_1 = 0,7 to 0,4
		Very heavy	f_1 = 0,4 to 0,1
f_2	Impact from dust-like load and vibrations	Moderate	f_2 = 0,9 to 0,7
		Heavy	f_2 = 0,7 to 0,4
		Very heavy	f_2 = 0,4 to 0,1
f_3	Increased bearing temperature (the f3 factors stated apply to high-temperature grease)	90°C	f_3 = 0,9 to 0,6
		105°C	f_3 = 0,6 to 0,3
		120°C	f_3 = 0,3 to 0,1
f_4	Incremented load	P/C* = 0,1 to 0,15	f_4 = 1,0 to 0,7
		P/C = 0,15 to 0,25	f_4 = 0,7 to 0,4
		P/C = 0,25 to 0,35	f_4 = 0,4 to 0,1
f_5	Air flow through bearing	Poor flow	f_5 = 0,7 to 0,5
		Intensive flow	f_5 = 0,5 to 0,1
f_6	Vertical shaft	Seal dependant	f_6 = 0,7 to 0,5

* P = Equivalent transient load
C = Transient load rating of the bearing

Greased-for-life bearings

Replacement of greased-for-life bearings is carried out in the exact same way as for open regreaseable bearings. The replacement interval for greased-for-life bearings is generally twice as long as the regreasing interval for the regreasing interval for open bearings and maximum 40.000 hours.

Replacement interval for greased-for-life bearings = 2 • regreasing interval of open bearings.

NOTE: It is extremely important that greased-for-life bearings are replaced by bearings that contain the same kind of lubricant. Grundfos motors come with a type of grease that can resist high temperatures.

How much lubricant?

It is difficult to state exactly how much grease it takes to lubricate motor bearings. Actually, the amount depends on many factors that relate to the size and shape of the housing, space limitations, bearing's rotating speed and type of grease used. In general, housings and bearings should be filled from 30% to 60% of their capacities.

Normally, the amount of re-lubrication is stated either in the lubrication instruction, on the nameplate or on a separate label on the motor. However, if this is not the case, it is possible to make a rough calculation of the needed amount of grease by the following formula:

$$G = 0.005 \cdot D \cdot B$$

G = Amount of grease (g)
D = Bearing outer diameter (mm)
B = Bearing width (mm)

Keep in mind that the formula is only a starting point for calculating the necessary amount of grease for relubrication of bearings. It is always better to apply a smaller amount of lubrication frequently than applying a large quantity once in a while.

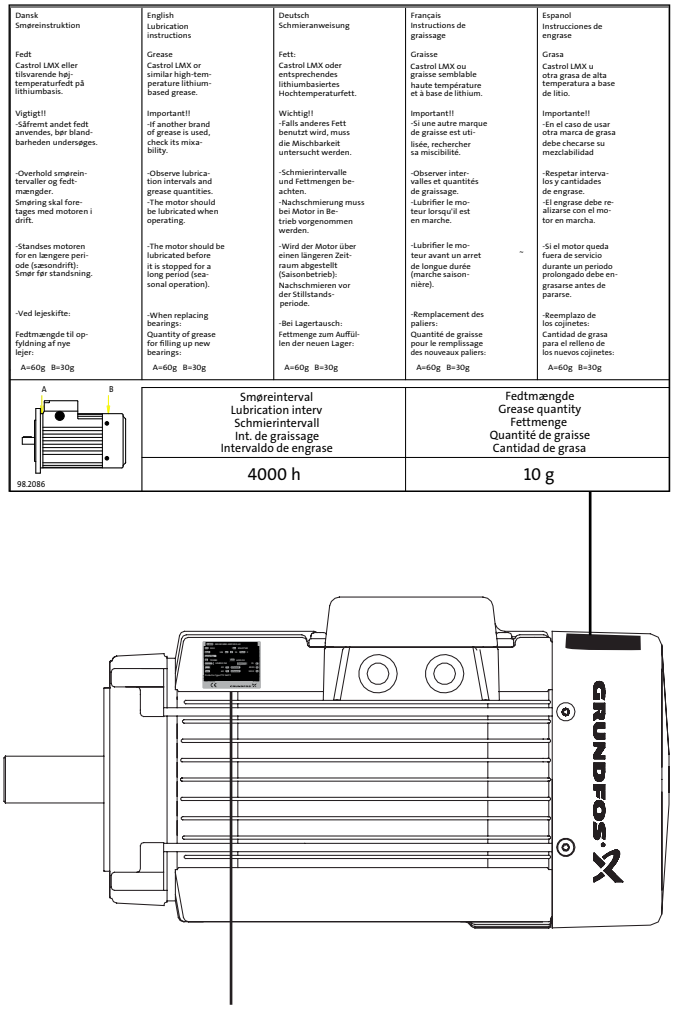

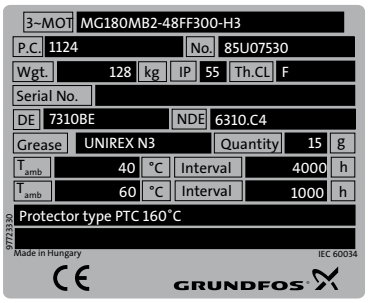

Typically, the regreasing information is listed on a separate label placed on the fan cover or directly on the motor's nameplate.

Bearings

Some re-lubrication manuals indicate the amount in volume (CC, CCM or cm^3) instead of weight (g). The relation between weight and volume for bearing lubrication is:

Weight = 1.1 • volume
[g] = 1.1 • [cm^3]

Motors with lubrication system

Motors with frame size 160 and above normally have lubricating nipples for the bearings both in the drive end and the non-drive end.

The lubricating nipples are often visible and easily accessible. Usually, the motor comes with grease flow around the bearing. New grease enters the bearing whereas old grease is removed automatically from the bearing when lubricating.

The illustration on your right hand side shows an example of how the **old** grease automatically is removed from the bearing and led out of the bearing chamber.

Motors with lubricating system are supplied with a lubricating instruction, for instance as a label on the fan cover. Apart from that, instructions are given in the installation and operating manual.

The lubricant is lithium-based, high-temperature grease, for instance EXXON UNIREX N3 or Shell Alvania Grease G3. The basic oil viscosity must be:

- Higher than 50 cSt (mm2/sec) at 40°C and 8 cSt (mm2/sec) at 100°C.

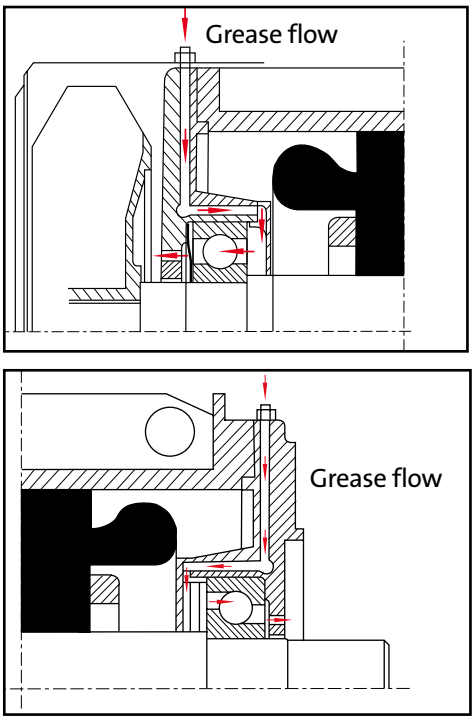

Construction of the lubrication system

Manual re-lubrication

When dealing with manual re-lubrication, there are several things to be aware of and several steps to follow:

Step 1:
The first thing to do is to remove the grease outlet plug if it is fitted.

Step 2:
Then, press the fresh grease into the bearing until all old grease has been forced out through the grease outlet hole or between the shaft and the flange.

Step 3:
Then, let the motor run 1-2 hours to ensure that all excess grease is forced out of the bearing. Close the grease outlet plug, (if fitted).

Preferably, the motor should be re-lubricated while it is running. However, sometimes this is not possible, and lubrication has to be carried out while the motor is at a standstill. In this case, use only half the quantity of grease. Then run the motor for a few minutes at full speed. When the motor has stopped, force the remaining quantity of grease into the bearing until the old grease has been replaced. After 1-2 running hours close the grease outlet plug (if fitted).

Automatic re-lubrication

Different kinds of automatic re-lubrication cartridges exist. The lubrication cartridge is mounted on the motor's lubrication nipples and lubricant is automatically being squeezed into the bearing by the lubrication nipple. Batteries or gas are usually involved in this process. PLC-control units control advanced automatic re-lubrication systems.

In connection with automatic re-lubrication it is important that the lubrication system can remove old grease from the motor. If this is not the case, compressed old grease is likely to occur which can result in overheating of the bearing.

Caution! when lubricating a running motor

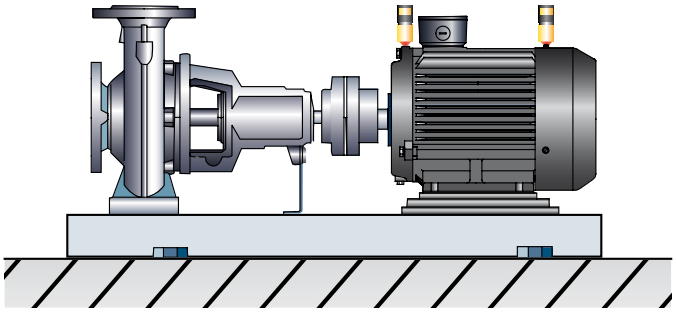

The lubrication cartridge is mounted on the motor's lubrication nipples and lubricant is automatically being squeezed into the bearing by the lubrication nipple

What to know about PREDICTIVE maintenance

The objective of predictive maintenance is to reduce maintenance costs by detecting problems at an early stage and deal with them. Observations of motor temperature, vibrations etc. are only a few examples of data that can help predict when the motor needs to be repaired or replaced. On the following pages, we will go through some of the tests that provide the necessary data about the state of the motor.

Bearing considerations

It is more or less impossible to predict how long a bearing's lifespan will be. L_{10h}, *or rating life*, is the life that is commonly used in load calculations. L_{10h} is the life in units of hours that 90% of a group of apparently similar ball bearings complete or exceed. Another accepted form is L_{50h}, also referred to as *median life* or *MTBF-meantime between failure*. L_{50h} is the life, which 50% of a group of bearings complete or exceed.

Rule-of-thumb: The value of L_{50h} is not more than five times larger than L_{10h}.

Under normal circumstances, L_{10h} (the lifespan of the bearings), lies within the interval of 16,000 – 40,000 hours for motor bearings. Both L_{10h} and F_{10h} can determine when the greased-for-life bearings need to be changed. The one with the lowest value decides when the time has come to replace the greased-for-life bearing.

Insulation considerations

By testing the strength of motor insulation, it is possible to predict motor failure. What follows is a presentation of the most used insulation tests that can predict motor failure: Ground insulation tests, polarisation index tests, surge tests and high potential testing.

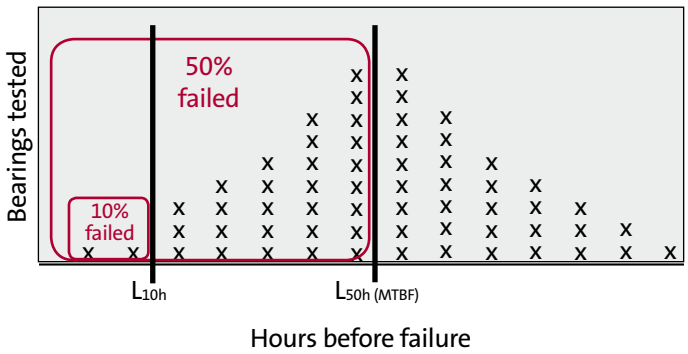

L_{10h} is the life hours that 90% of a group of apparently similar ball bearings complete or exceed

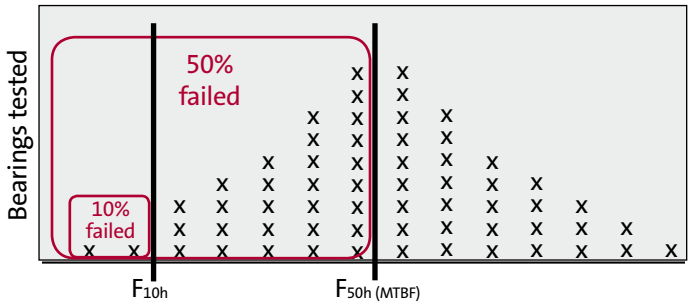

F_{10h} is an expression of the lifespan of the grease.
F_{10h} is the life hours that 90% of a group of apparently similar ball bearings complete or exceed

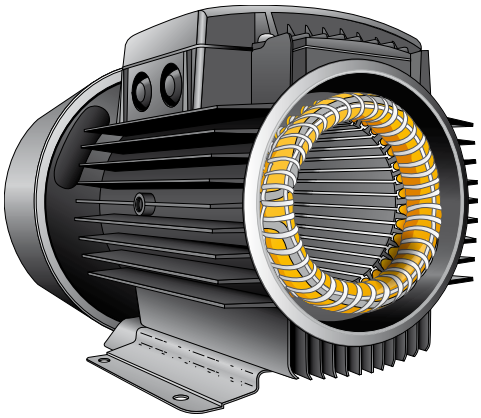

By testing the strength of motor insulation, it is possible to predict motor failure

Ground insulation test

The ground insulation test is the easiest test to carry out in order to predict most motor failures. This is how the test works: DC voltage, of 500 or 1000 V is applied between windings and ground of the motor and makes it possible to measure the resistance of the insulation.

The insulation resistance measurement is carried out by means of a megohmmeter - high resistance range ohmmeter. During the measurement and immediately afterwards, some of the terminals carry dangerous voltages and MUST NOT BE TOUCHED.

Now, three points are worth mentioning in this connection: Insulation resistance, measurement and checking.

Insulation resistance

- The minimum insulation resistance of new, cleaned or repaired windings with respect to ground is 10 Megohm or more.
- The minimum insulation resistance, R, is calculated by multiplying the rated voltage, U_n, with the constant factor 0.5 Megohm/kV. For example: If the rated voltage is 690 V = 0.69 kV, the minimum insulation resistance is: **0.69 kV • 0.5 Megohm/kV = 0.35 Megohm**

Measurement

- Minimum insulation resistance of the winding to ground is measured at 500 V DC. The winding temperature should be 25°C +/- 15°C.
- Maximum insulation resistance should be measured at 500 V DC with the winding at operating temperature between 80 - 120°C depending on the motor type and efficiency.

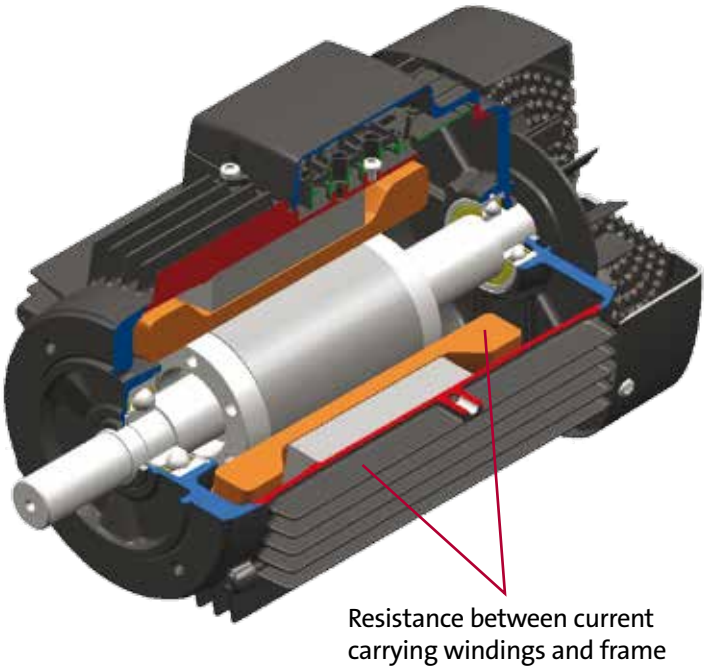

Ground insulation test

What to know about PREDICTIVE maintenance

Checking

- If the insulation resistance of a motor is less than 10 Megohm - the reason might be that the windings are humid and need to be dried.
- If the motor has been operating for a long period of time the minimum insulation resistance may drop to a critical level. As long as the measured value does not fall below the calculated value of minimum insulation resistance, the motor can continue to run. However, if it drops below this limit, the motor has to be stopped immediately, in order to avoid that persons get hurt due to the high leakage current.

Insulation resistance value	Insulation level
2 Megohm or less	Bad
2-5 Megohm	Critical
5-10 Megohm	Abnormal
10-50 Megohm	Good
50-100 Megohm	Very good
100 Megohm or more	Excellent

Guidelines for insulation resistance values

The insulation resistance test is a very useful test that helps to determine when the motor needs to be repaired or replaced. The insulation resistance test has to be conducted regularly in order to gather enough data, which in the last resort can prevent failures. As shown in the graph on your right-hand side it is easy to see if and when the insulation resistance degrades. In this specific case, the insulation resistance degrades after 60 months. Consequently, the motor needs to be removed from service so that the stator windings can be cleaned and dried. Worst case scenario: The motor has to be rewound or replaced.

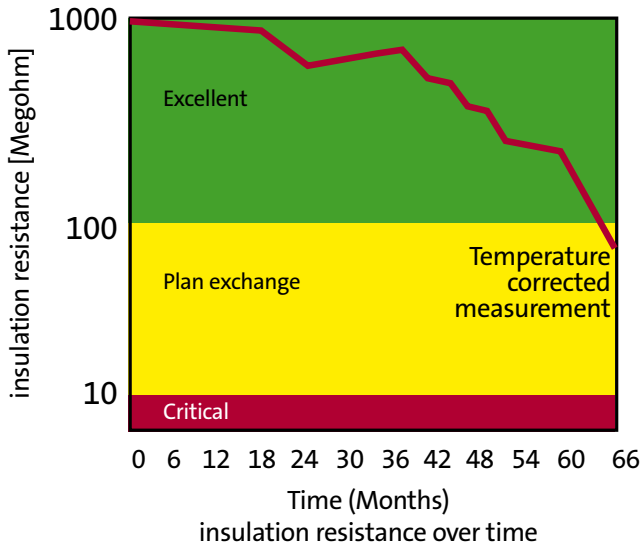

The insulation resistance decreases over time

Cleaning and drying stator windings

In the case where the insulation resistance value is not attained, the winding might be too damp and need to be dried. The drying process is a very delicate one. Excessive temperature as well as too quick temperature increase can generate steam, which damages the windings. Therefore, the rate of temperature increase must not exceed 5°C/h and the winding should not be heated up to more than 150°C for class F motors.

During the drying process, the temperature has to be controlled carefully and the insulation resistance should be measured regularly. But how will the winding react to the temperature increase. Well, in the beginning the insulation resistance will decrease because the temperature increases, but during the drying process, it will increase. No rule-of-thumb exists as to the duration of the drying process; it is carried on until successive measurements of the insulation resistance are constant and higher than the minimum value. However, if the resistance is still too low after the drying process, it is due to an error in the insulation system, and the motor has to be replaced.

Motors which have been filled with water or which have low insulation resistance to ground because of contamination by moisture, oil or conductive dust should be thoroughly cleaned and dried. Normally, hot water and detergents are used to remove dirt, oil, dust or salt concentrations from rotors, stators and connection boxes. After the cleaning process, the windings have to dry. The time it takes to obtain an acceptable level of insulation resistance varies from a couple hours to a few days.

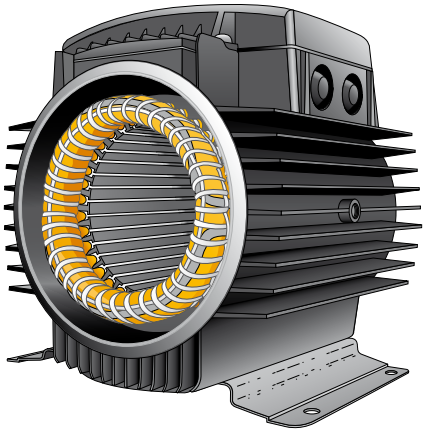

Stator in housing ready for drying

Surge test

Whereas insulation resistance tests and P.I. tests only detect the final stages of an insulation wear-out, the surge test determines the initial stages of insulation wear-out.

The surge test examines the turn-to-turn and phase-to-phase insulations. Phase-to-phase insulation is the protection between the winding and the ground and between each phase. The turn-to-turn insulation is the thin film, which is applied to the surface of the copper wire.

The surge test generates a voltage through the turn-to-turn and phase-to-phase insulations. This is done by discharging a capacitor into a winding and thereby rapidly pulse the voltage to a certain level. The result or rather the pattern can be seen on an oscilloscope that reveals the test findings through each phase of the motor. The three phases of the motor are identical, and thus, the test patterns must be identical. Unequal patterns indicate that an insulation failure has occurred in the motor.

Waveform for a defective winding

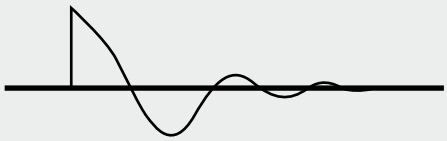

Waveform for good windings

High potential testing - HIPOT

High potential testing (HIPOT) is an overvoltage test, which determines if a winding has a certain level of insulation strength. In general, good insulation withstands voltage levels that are much higher than the voltages used in HIPOT. So, insulation failures during regular maintenance test of the motor mean that the motor's insulation is unsuitable for any further use and that the motor has to be replaced. Two types of high potential testing exist: DC high potential ground test and AC high potential ground test.

DC high potential ground test

The DC high potential ground test (U_{test}) is a non-destructive routine test. This implies that the test ensures sufficient insulation strength. The following formula shows how to determine the voltage level applied for one minute for DC high potential ground testing of motors operating at 600 V or less.

New motors:

$$U_{test} = 1.7 \cdot (2\ U_{rated} + 1000\ \text{V})$$

Motors already in service:

$$U_{test} = 2\ U_{rated} + 1000\ \text{V}$$

U_{test} = DC high potential ground test voltage

U_{rated} = Rated voltage of the motor, e.g. 400 V

When the DC high potential ground test has been carried out, it is necessary to discharge the windings to prevent serious injury of personal from happening. To make sure that any remaining charge is lead to ground, the winding cables must be connected to the motor frame after the test.

AC high potential phase to ground test and phase-to-phase test

The AC high potential phase to ground test and phase-to-phase insulation is a test, used to prove existence of a safety margin above operating voltage. High AC voltage is applied between windings and the frame and between phase-to-phase insulation. AC high potential tests are often used to determine any weakness in the insulation system.

The test is a destructive test in the way that the currents involved in AC high potential ground test, break down the insulation and cause permanent damage. AC high potential ground test should never be applied to a motor with a low megohmmeter reading.

Test voltages used for AC high potential ground tests comply with the international standard IEC60034-1. According to the standard, the test voltage for motors with P_2 < 10000 kW has to be:

$$U_{test} = 2U_{rated} + 1000\ \text{V}$$

U_{test} = AC high potential test voltage
U_{rated} = Max rated voltage of the motor

The test voltage should be minimum 1500 V for 1 minute. In mass production of motors up to 5 kW the IEC60034-1 *1-minute test* can be replaced by a *1-second test*, where the test voltage is increased additionally 20%.

DC rather than AC high potential tests are becoming popular because the test equipment is smaller and the low-test current is less dangerous to people and does not damage the insulation system.

AC high potential ground testing can be used to test new and newly rewound motors and is not suitable for routine maintenance programs.

Motor temperature

A motor's temperature affects its lifespan and is a clear indication of how well it is operating. If the motor temperature exceeds the limits for the insulation class, e.g. 155°C for class F motors, by 10°C, the lifespan of the insulation can be reduced by 50%. The insulation class is always indicated on the nameplate.

The table to the right shows the two most commonly used insulation classes: B and F. Each insulation class must be able to withstand maximum ambient temperatures plus any temperature increase from normal full-load operating conditions.

Control of the bearing temperature can also be a part of the predictive maintenance process. The temperature rise of grease-lubricated bearings must not exceed 60° C measured at the external bearing cap.

ΔT bearing = 60 K

Ambient temperature = 40°C

Absolute bearing temperature =
ΔT + ambient temperature

60 K + 40°C = 100°C

The absolute bearing temperature should NOT exceed 100°C.

It is possible to monitor the motor bearing temperature constantly with external thermometers or with embedded thermal elements. Alarm and tripping temperatures for ball bearings can be set at 90°C - 100°C.

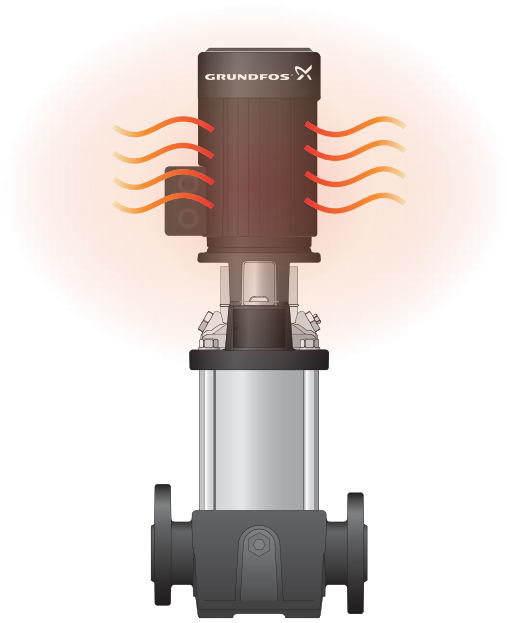

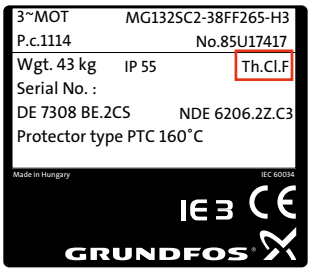

Insulation class. Cl.F

Class	Insulation hot spot	Typical surface	Typical bearing
	Temp. (°C)	Temp. (°C)	Temp. (°C)
B	130	60-90	60-90
F	155	80-120	70-120

Typical absolute temperatures which can be measured for the most common insulation classes. Though Grundfos motors are class F motors, they only have class B temperature rise. Therefore, class B temperatures listed in the table are used.

What to know about PREDICTIVE maintenance

Thermographic inspection

Infrared scanning is a well-suited tool used for troubleshooting of motors. By using infrared scanning, it is possible to detect problems in the motor that can cause the temperature to rise, such as worn-out bearings, lack of lubrication or heat from friction of the rotating parts.

The infrared scanning makes it possible to detect and photograph hot spots in the motor. Thus, the scanning makes it possible rapidly to take action when the hot spots have been identified and avoid any damage to the motor.

Under normal circumstances, thermographic surveys are carried out during regular operation and under full-load conditions. The survey diagnosis is used to detect maintenance problems in the motor and can in the long run increase the effectiveness of the maintenance program.

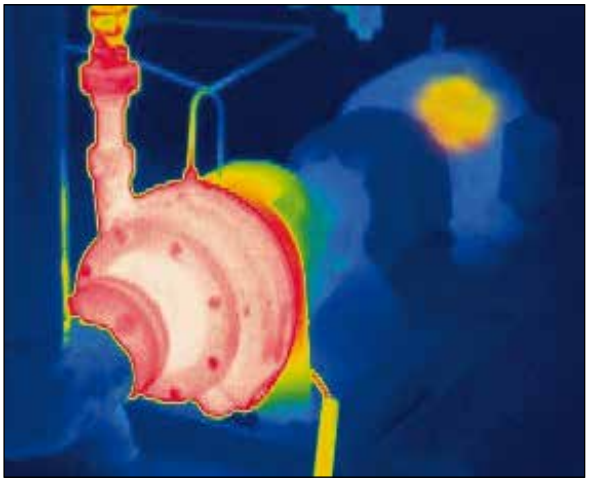

Thermographic of a pump which is handling hot water

Manually operated equipment for measuring surface temperature

What to know about REACTIVE maintenance

When motors fail, it is important to examine the motor and find out where in the motor it happened and why it happened. Normally, adequate preventive maintenance can prevent the failure. If the failure is caused by a weak component or inadequate maintenance, then all similar equipment has to be examined in order to prevent the same failure from occurring elsewhere in the motor or in the entire system.

When to repair instead of replacing

Motor efficiency is one of the major concerns for motor users due to the high cost of electric energy. Therefore, when a motor fails for whatever reason, the question of whether the old motor should be repaired or simply replaced by a new one cropps up. Due to the continuously rising energy prices, motor users often choose to buy a new motor. However, rewinding or otherwise repair of a motor might be a cheaper solution. In order to decide whether it is profitable to repair or replace a motor, several factors have to be considered:

- New purchase price >< Cost of repair
- Efficiency of existing motor >< efficiency of new motor (Rewound motors never provide the same level of efficiency as original motors)
- Availability of a new motor
- Lifetime calculations of electric energy consumption - existing motor >< new motor
- Residual value - existing motor
- Cost of modifications in connection with the mounting
- Cost downtime and repairs
  - existing motor >< new motor

What to know about REACTIVE maintenance

A key factor for deciding whether to repair or replace the motor is the annual energy saving, which can be calculated in the following way:

$$kW_{saved} = P_2 \cdot Y \cdot \left(\frac{1}{\eta_{ex}} - \frac{1}{\eta_{new}} \right)$$

P_2 = Power output – indicated on the nameplate
Y = Load as percent of full rated load
- can be found via Win CAPS
η_{ex} = Efficiency in percent of existing motor after repair
η_{new} = Efficiency in percent of replacement motor

Total electric saving =
kW_{saved} • annual operating hours • kWh rate

Depending on in which country the rewinding of the motor takes place, it will cost at least 33% of the acquisition price of a new motor, maybe even more. Unfortunately, the efficiency of a rewound motor is seldom as high as for a new motor. Therefore, motor users always have to consider purchasing a new motor. During motor failure or during the stripping of the winding from the stator core prior to rewinding, high temperatures can occur. The high temperatures can affect the electrical characteristics of the stator core steel and increase the iron losses and lower the motor efficiency. In order to keep the original motor performance after rewinding a motor, it is important always to follow the manufacturer's specifications. To ensure that motor efficiency is maintained or improved after the rewinding process, motor repair shops collaborate on developing quality standards, testing, and training in proper motor rewinding practice.

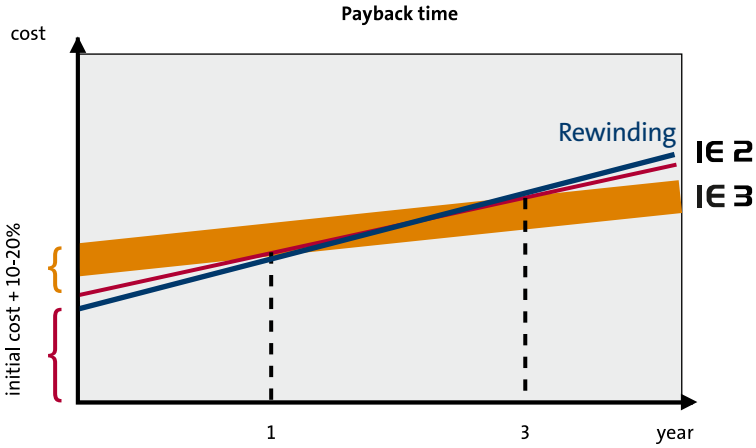

Principle cost of ownership graph of rewound motor compared to new motor with different efficiency. The cost of rewinding differs from country to country.

How to ensure high quality repair work

Three overall guidelines can help you to ensure a high quality of repair work:

1. Evaluate potential motor repair suppliers
2. Be realistic about the repair time
3. Let your supplier know what your needs are

In order for you to evaluate the range of potential suppliers, you need to get some information about them. Ideally, what you need to do is to make appointments and spend adequate time at the supplier's service center to evaluate them. What follows is a list of factors you need to check to evaluate the supplier thoroughly.

- √ **Quality control program** - Look for indicators of participation in an ISO 9000 program.
- √ **Facilities**
  Check that the service centre has sufficient facilities and materials to handle the specific size and type of motor.
- √ **Test equipment** – Check what test equipment the service centre uses to verify that the repair work is carried out correctly, i.e. vibration testing equipment, surge comparison tester, core loss tester, etc.
- √ **Record system** - Ask to see the service centre's record system. The record system contains information about maintenance records on repaired motors.
- √ **Insulation removal** - Inquire about the method of insulation removal, e.g. burn-off, mechanical pulling, etc. For burn-off, ask about methods for preventing flames or hot spots and ensuring uniform temperature when heating multiple motors.
- √ **Measuring tools** - Use calibrated measuring tools.
- √ **Measure the flange run-out** and the shaft extension run-out when the motor has been reassembled.
- √ **General information** - Make inquiries about the service centre's turnover, the staff's training possibilities, etc.
- √ **General appearance –** Observe the overall cleanliness and orderliness of the service centre.

What to know about REACTIVE maintenance

Bearing replacement

Because bearings in motors are very much exposed to wear, it is normal that they have to be replaced every now and then during the motor's lifespan. To avoid replacing the bearings too often, always follow the manufacturer's recommendations closely.

In the following paragraphs, we will provide you with some general guidelines as to how to dismount bearings, how to mount new bearings, what measures to adopt in connection with the mounting and how you assure that the bearing is correctly installed in the motor.

Dismounting

In connection with service and maintenance procedures of other motor parts, bearings are often removed. Shaft and housing are almost always reinstalled. Therefore, the same guidelines for cleanliness apply for both dismounting and mounting.

Mounting of new bearings

Before the mounting of new bearings, it is necessary to clean other motor parts, the housing and the shaft. If the old grease and dirt is not removed, the bearings will make noise and it will reduce the lifespan of the new bearings.

Place a sleeve between the bearing ring and the hammer and tap the sleeve lightly all around.

Sometimes, large sized bearings have to be heated up so that they can be assembled on the shaft more easily.Insertion of some sort of heat source in the bore of the bearing can help to heat up the bearing.

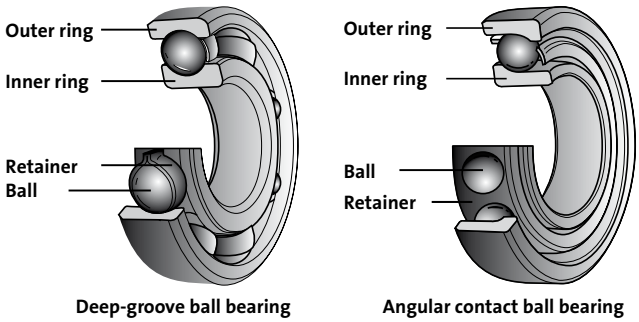

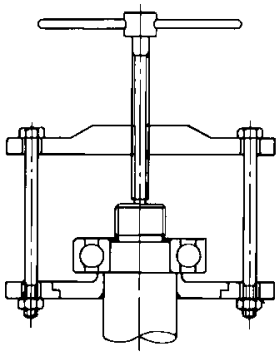

Dismounting of used bearing

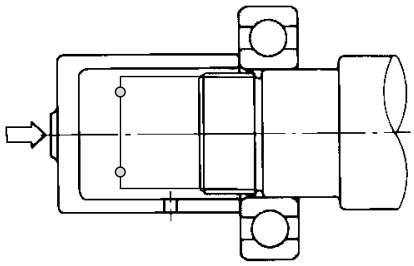

Mounting of new bearing

Bearing mounting precautions

Bearings have to be kept clean. Penetration of dirt or any other contaminants into the bearing can cause premature failure. What follows is a list with some recommendations as to how to handle bearings and keep them free of dirt.

- Always clean your hands before touching the bearing.
- Do not remove the rust preventive oil from the bearing. Most bearings can be mounted without removing the oil.
- Do not drop or hit the bearings. If the geometric precision is damaged, the bearing will not operate satisfactory.
- Always use clean tools in clean work places, when you mount bearings.
- Only use tools made of wood or light metal to install the bearing. Avoid tools which damage the surface.
- Open the bearing packaging just prior to use.
- Read the manufacturer's instructions thoroughly and follow them.

Running Test

In order to ensure that the bearing is correctly mounted in the motor, it is necessary to run a test. First, the shaft or housing is rotated by hand. If this does not cause any problems, the bearing is tested with a low-speed, no-load test. If there are still no signs of abnormalities at this point, then increase the load and the speed gradually to normal operating conditions. Now, if any unusual noise, temperature rise or vibrations occur during the test, then stop the test immediately and check if the motor is assembled correctly.

What to know about REACTIVE maintenance

Spare parts for pump motors

Only original spare parts should replace damaged motor parts, otherwise the guarantee is not valid.

A simplified model of a MG160 and MG180, model H motor is shown on this page. The following spare parts are available for repairing this Grundfos MG motor. Similar spare parts are available for repairing other MG or MMG motors.

1. Fan cover
2. Protective cover for lubricating nipple, non-drive end
3. Locking ring for fan
4. Fan
5. Square ring, non-drive end
6. End shield, non-drive end
7. Lubricating nipple, non-drive end, tapered, DIN 71412
8. Corrugated spring
9. O-ring, bearing, non-drive end
10. V-ring, non-drive end
11. Bearing, non-drive end
12. Inner bearing cover, non-drive end
13. Gasket, non-drive end
14. Eyebolt
15. Terminal box cover with gasket
16. Gasket, drive end
17. Key
18. Inner bearing cover, drive end
19. Bearing, drive end
20. V-ring, drive end
21. Flange (B3, B5, B14), drive end
22. Lubricating nipple, drive end, tapered, DIN 71412
23. Plug for drain hole

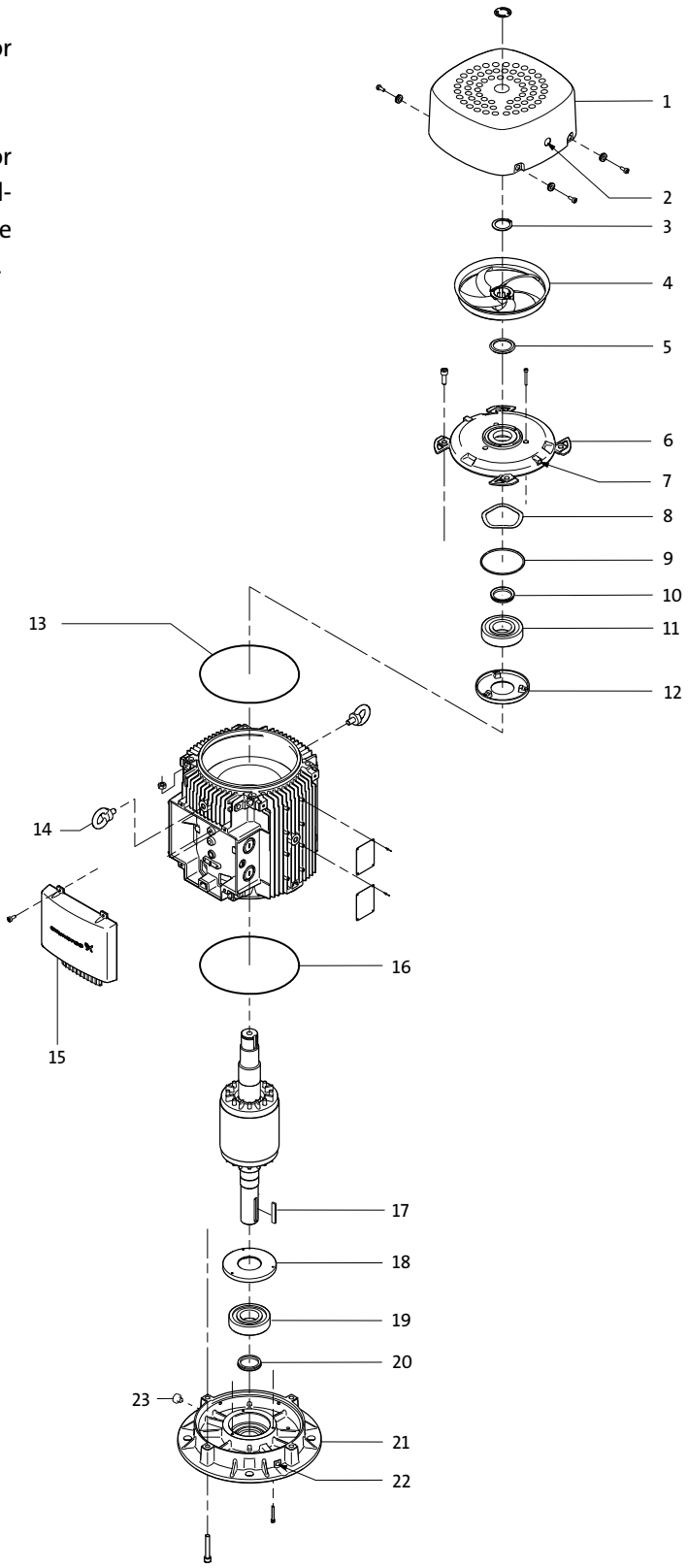

Exploded view of a motor

You can find the spare part number in WebCAPS.

Measurement of repaired motor

When a motor is dismounted because the bearings need to be replaced, it has to be tested for flange run-out and shaft extension run-out according to the international standard IEC 60072-1.

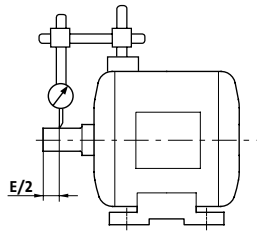

Shaft extension run-out B3 motors

Shaft extension run-out

Shaft diameter	>10 up to 18 mm	>18 up to 30mm	>30 up to 50 mm	>50 up to 80 mm	>80 up to 120 mm
Run-out µm	35 µm (0.035 mm)	40 µm (0.040 mm)	50 µm (0.050 mm)	60 µm (0.060 mm)	70 µm (0.070 mm)

Maximum excentricity of shaft in flanged motors (standard class)

Apply the point of the indicator to the shaft, midway along its length. Read the maximum and minimum values on the indicator through one slow revolution of the shaft. The difference between the readings should not exceed the value given in the table above.

The test can be carried out with the motor set up in either horizontal or vertical position and with the indicator fixed directly to it or mounted on a common surface plate supporting both motor and indicator.

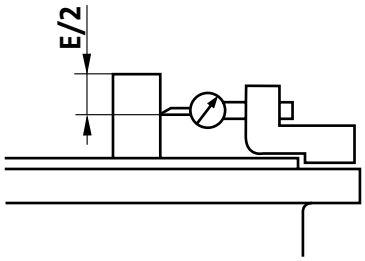

Shaft extension run-out for B14/V18/B5/V1 motors

Concentricity of spigot on shaft

Flange (FF) or face plate (FT)	F 55 to F 115	F 130 to F 265	FF 300 to FF 500	FF 600 to F 740	FF 940 to FF 1080
µm	80 µm (0.08 mm)	100 µm (0.10 mm)	125 µm (0.125 mm)	160 µm (0.16 mm)	200 µm (0.20 mm)

Maximum tolerances of concentricity of spigot to shaft

Fix the indicator rigidly on the shaft extension, by a device similar to that shown in the figure, at a distance of about 10 mm from the mounting face of the flange.

Read the maximum and minimum values on the indicator through one slow revolution of the shaft. The difference between the extreme readings of the concentricity test indicator must not exceed the values given above.
Test the motor set up with a vertical shaft so that the measurement so that the measurement is not affected by gravity

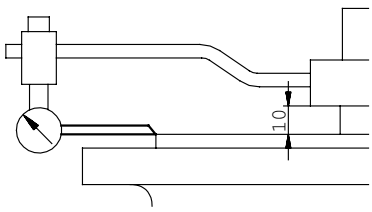

Concentricity of spigot on shaft

Perpendicularity of mounting face of flange to shaft

Fix the indicator rigidly on the shaft extension, by means of a device similar to that shown in the figure at your right-hand side, at a distance of about 10 mm from the mounting face of the flange.

Read the maximum and minimum values on the indicator through one slow revolution of the shaft.

The difference between the extreme readings of the perpendicularity indicator must not exceed the values given in the table below. Test the machine set-up with a vertical shaft to eliminate the axial clearance in the bearing.

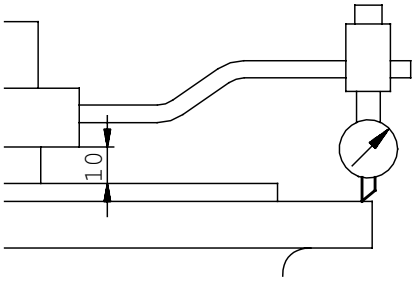

Perpendicularity of mounting face of flange to shaft

Flange (FF) or Face plate (FT)	F 55 to F 115	F 130 to F 265	FF 300 to FF 500	FF 600 to F 740	FF 940 to FF 1080
µm	80 µm (0.08 mm)	100 µm (0.10 mm)	125 µm (0.125 mm)	160 µm (0.16 mm)	200 µm (0.20 mm)

Maximum tolerances of perpendicularity of mounting face of flange to shaft

Conclusion

The objective of motor maintenance is to reduce unplanned and expensive downtimes thus reactive maintenance, which affects the manufacturing process. Preventative maintenance can without no doubt improve the motor efficiency and consequently the plant efficiency. Predictive maintenance helps determine when the time has come to replace a motor with a more energy efficient kind. Last but not least, reactive maintenance is necessary when preventive and predictive maintenance have not been carried out properly or when the motor is not designed correctly or installed with material or production errors. Reactive maintenance is unwanted maintenance because it leads to motor damages or a burned motor and consequently production downtime.

be think innovate

MIX
Paper from responsible sources
FSC® C009911

98 07 92 36/0415/GPMA Motors & Drives/10135-D&I

The name Grundfos, the Grundfos logo, and be think innovate are registered trademarks owned by Grundfos Holding A/S or Grundfos A/S, Denmark. All rights reserved worldwide.

GRUNDFOS Holding A/S
Poul Due Jensens Vej 7
DK-8850 Bjerringbro
Tel: +45 87 50 14 00
www.grundfos.com

GRUNDFOS